Development of a Compact Excavator Mounted Dust Suppression System

Kieran Andrew Wallace

PTS Demolition and Dismantling Ltd

Beaumont Way

Aycliffe Business Park

Newton Aycliffe,

Co. Durham, DL5 6SN, UK

kieranwallace@yahoo.co.uk

Wai Ming Cheung (corresponding author)

Faculty of Engineering and Environment,

Department of Mechanical Engineering,

University of Northumbria,

Newcastle Upon Tyne,

NE1 8ST, UK.

wai.m.cheung@northumbria.ac.uk

+44(0)191 243 7584

Word count: 6521

Keywords: dust; particles; construction demolition process; dust suppression; environmental benefits; cost benefits

Abstract: This paper reports on the investigation of an excavator mounted dust suppression system for demolition and construction activities. Ever increasing pressure is placed on contractors to improve their environmental performance, especially dust emissions. Current methods of dust suppression have been investigated and each of the methods has also been critically analysed to determine their advantages and disadvantages. The investigation also examined the requirements of such a system and a concept system proposal was produced. A working prototype has been constructed for a mini excavator complete with a hydraulic breaker. The proposed system was rigorously tested in various configurations to determine its efficiency and effectiveness in comparison with current suppression techniques. The resulting benefits such as the reduction of water usage and cost are highlighted.

1 INTRODUCTION

Dust on construction and demolition sites has always been an issue, particularly regarding the health hazards of inhaling dust and the visibility issues associated with airborne dust particles (Zhao et al., 2012). As health, safety and environmental regulations are increasingly tightened, contractors and clients are forced to explore new ways of controlling dust. Dust is particle matter consisting of very small particles with a diameter ranging from 2.5 to 10 µm. Fugitive dust is one type of these small particles that are most hazardous to human health (Wu and Chen, 2011; Dimari et al., 2008; Driussi and Janz, 2006).

Ever increasing regulations on environmental responsibility for contractors means that construction and demolition sites no longer have the option to recycle, especially on demolition sites that recycle concrete and stone products which produce fugitive silica dust (Dimari et al., 2008). Recent Health and Safety Executive (HSE) funded research

suggested that over 650 construction deaths from silica-related lung cancer occurred in the UK in 2004. This equals 12 construction workers a week and suggests that silica inhalation is currently the second most important cause of occupational lung cancer after asbestos (HSE, 2004). Lung cancer is not the only effect of silica inhalation, which is the inhalation of small dust particles that causes scarring of the lungs known as silicosis. This condition can make the affected person breathless and disabled. Silicosis also increases the risk of serious infections such as tuberculosis (Petavratzi et al., 2005). Dust may not seem very dangerous but, with findings like these, it is imperative that something is done to reduce exposure throughout the construction industry.

Demolition activities involving excavators and hydraulic breakers often involve dust, whether the dust is built up over time in buildings being demolished or produced in the breaking or cutting of dry material such as concrete. With ever tightening health, safety and environmental legislation surrounding airborne dust on construction and demolition sites, contractors and clients are always searching for new initiatives and technology to combat airborne particulate matter. An excavator mounted dust suppression unit could reduce the requirement for excessive amounts of water to be used; due to this reduction in water usage, the amount of slurry produced causing slip hazards and other environmental issues could also be reduced. Internal demolition using mini excavators produces dust in a confined space and large air movers are usually used to extract the dust. However, in buildings with poor ventilation and confined space, it is not always possible to implement such equipment. This would be the perfect situation to implement a compact excavator mounted dust suppression system as proposed in this research. For this reason, a mini excavator has been used in this investigation to determine the effect of the proposed prototype system.

Conventional methods of dust suppression extract the air and particles, pass the mixture through filters to remove the particles and then recycle the air using wet suppressants to prohibit the dust particles from becoming airborne. However, using extraction equipment is not always practically possible to implement and can also be very expensive to operate, including, for example, regular maintenance and the requirement of large amounts of electricity to power the system. In addition, extraction units are not very effective in ambient environments such as outdoors. This is due to the dispersion of dust particles in the infinite volume of air upon release. Conventional wet methods of dust suppression are generally the most common technique being utilised across the world, mainly due to the feasibility of the system and the simplicity of implementation. Typically, large amounts of water are used to wet material as it is broken out to prohibit the release of dust particles. This type of system is not very effective for large-scale demolition as the working area must be constantly supplied with water, often proving very expensive. Wet dust suppression also creates environmental issues due to the slurry produced between the dust and water which can block drains and cause slip hazards.

Therefore, a new system is required to overcome these shortcomings. As such, a prototype concept was proposed and analysed, initially using Computer-Aided Engineering (CAE) simulation. The prototype was then manufactured and tested with Tyne Tees Demolition Ltd (now PTS Demolition and Dismantling Ltd) in County Durham, UK. The layout of this paper is as follows: Section 2 describes the relevant literature. Section 3 discusses the proposed solutions. Section 4 discusses the methodology and implementation issues. Section 5 describes a case study and data analysis and, finally, the conclusion and future work is presented.

2 LITERATURE REVIEW ON CONVENTIONAL DUST CONTROL

As more and more clients and contractors introduce no dust policies, dust suppression and environmental impact become very strong arguments during meetings of the National Federation of Demolition Contractors. Under Part 5 of the Environmental Act 1995 and the UK Air Quality Strategy, construction site operators need to demonstrate that both nuisance dust and fine particle emissions from their sites are adequately controlled and are within acceptable limits (Makuch and Karyampa, 2012). These limits vary between local authorities, depending on their environmental targets.

Almost all processes that create dust on construction and demolition sites are undertaken by the HSE using wet methods and local exhaust ventilation (HSE, 2010). The wet method suppresses dust but creates slurry making the working area slippery and potentially hazardous. The local exhaust ventilation system does not produce wet slurry; however, using an industrial wet and dry vacuum cleaner on-site creates noise issues and also trip hazards because of the cables used to power the equipment.

Dust collection is often a process used in the manufacturing of aggregate products such as cement. This is often more expensive to implement and maintain but when wet systems cannot be used due to chemical reactions or environmental issues, the process is often the best solution. Chemco manufacturing (Schweizer and Motter, 2001) has a filter cartridge to collect dust and powders as small as 0.3 µm. The cartridge is very large and the efficiency is only really increased by agitating the filter to ensure maximum surface area is contacted by the particles. Cyclone technology (Ahn et al., 2006) is also utilised to scrub off coarse particles (> 2 µm). These systems are often used together to increase efficiency. These processes require large equipment and lots of power that is not suitable for portable sites.

Wet dust suppression is the simplest way of suppressing dust, especially that caused on-site. Conventional methods use large quantities of water and fire hoses to douse the working material to prohibit dust generation. This again causes slurry that is hard to dispose of and often causes hazards. The requirements for large quantities of water on-site and the time required for refilling obviously have a negative effect on project profitability (Gambatese and James, 2001).

Recent developments have introduced machines into the industry to combat the problems of water usage and water distribution. A system that has taken off globally is the “Dust Boss System” (DBS) (Holman, 2012). However, no two demolition projects are the same so the versatility of the DBS is paramount. The DBS operates using a ring of atomising nozzles emitting high pressure water to create a fine spray and, with an inbuilt fan, projects the mist to create a blanket of mist to suppress dust particles.

In accordance with Peterson (2011)**,** the most effective atomised spray control system is the one that produces droplets approximately the same size as the airborne particles, meaning there should be a greater chance of collision between droplets and the dust particles. Gambatese and James (2001) proved that changes in water flow pressure of an atomised spray control system would affect the efficiency of the suppression system. Their testing also showed that with a low pressure and low flow system to produce larger droplets, the effectiveness of changing the flow between medium and low systems has little effect. This provides some interesting information in the fact that a reduction in flow is not always detrimental to the efficiency of the suppressant system. This would be useful for the development of the compact excavator mounted dust suppression system. Although this new dust suppression technology is proving its worth within the demolition industry, according to researchers at Utrecht University (Nij et al., 2003), “Wet dust

suppression and use of ventilation systems in tunnels were not strongly associated with lower levels of exposure. When the material worked on was only moist instead of wet, exposure levels were even elevated relative to working on dry material". Further evidence by researchers at Utrecht University (Nij et al., 2003) states: "It could be that when the material is moist, working on it might seem less hazardous and as a result enhance the workers' exposure". This shows that the investigation should perhaps consider the effectiveness of the system against two baselines:

1) suppression and;
2) full dust suppression (large quantities of water).

A Caterpillar excavator mounted dust suppression system was investigated by Innovative Technology (1998) and the system is still operational after more than a decade (Ahn et al., 2009; Edwards et al., 2002). The system consists of a 2000 L water tank and a high pressure pump connected with a high pressure nozzle. The system provides an 18% reduction in labour cost and a 90% reduction in water usage. The system massively reduces the risk of contamination through waste water and drastically reduces the costs of labour and water. The main disadvantage of the system is that the sheer volume of water required is not feasible for smaller demolition equipment. The usage of water is approximately 57.5 L/min; thus, this requires the 2000 L tank to be filled every 35 min during operation (Innovative Technology, 1998). Therefore, part of the aim in this investigation is to reduce the water consumption. According to Innovative Technology (1998), other disadvantages of the system are:

(i) the spraying process could reduce operators' visibility whilst using the equipment;
(ii) the direction of control during the spraying process could be affected under windy conditions and;
(iii) the nozzle needs to be checked regularly for tightness and damage.

These shortfalls have been considered in the proposed prototype design to ensure that they are met by the investigation.

3 PROPOSED SOLUTIONS

The literature review has revealed that the major problem with wet dust suppression systems is the production of slurry. On a demolition site the production of slurry causes many problems such as slips and fall hazards so bunds need to be constructed to act as soak-away. These take time to construct and often create potential drowning hazards on-site. If water becomes contaminated this can prove expensive to be disposed of.

Dry fog systems are primarily used in transfer operations during the manufacturing of powders and dusts. Dry fog systems operate using a dual fluid nozzle to produce ultra fine droplets and the fog achieves suppression through agglomeration (Kaveri Ultra Ltd, 2008). The water retention added to the process is between 0.1% and 0.5% (Kaveri Ultra Ltd, 2008). The water droplets are large enough to capture the dust particles and make them heavy enough to fall back onto the conveyor. However, the droplets are small enough to evaporate quickly so that excess water will not be transferred to the material resulting in this reduced water retention. This is a very effective method as the process also lends itself to fragile equipment such as electronics. Therefore, the approach of using dry fog dust suppression systems can control airborne dust without wetting the product or site machinery (Sealpump, 2013; Gunson et al., 2012). This also occurs because of the small mass of the droplets: the small droplets rebound from the object where larger ones will burst upon impact, thus wetting the object (Copeland et al., 2009).

The advantages of using dry fog systems lie in the fact that the technology is relatively simple and compact, slurry will not be created and water usage is very low. However, one

of the obstacles is visibility because dry fog creates an instant opaque layer which can affect the excavator operator's vision during the demolition process.

TurboSonic (Raring, 1998) have produced a dry fog system that is specifically designed to cope with particles between 0.1 µm and 3.0 µm in diameter. According to Raring (1998), these fine particles are the principal cause of dust clouds, haze and low levels of visibility. The system is specifically designed to overcome the problems of visibility. In dry fog, this does come with a price as effective suppression of larger particles is now greatly reduced. Due to the variety in size of dust particles on a demolition site and the need for versatility, this process is not perfect. Therefore, this research proposed the idea of atomising the water so that it is more effective, does not create slurry and visibility is increased by the dispersion of the droplets.

3.1 Atomising Sprays Solution

To reduce the complexity of the dry fog systems but maintain the effective suppression gained using small droplets in a mist, this investigation has adopted the atomising technique. Atomising the water is achieved by pushing it through a small nozzle; the effectiveness of the spray, however, depends upon a number of variables (Bartell and Jett, 2005; Mondal et al., 2004):

- drop distribution;
- drop velocity;
- spray pattern and spray pressure.

3.1.1 Drop distribution

Drop distribution is dependent upon pressure: as the operating pressure increases, the distribution of droplets becomes less regular. Due to the drop size decreases, the droplets

leave the nozzle with greater velocity but less momentum, therefore irregular distribution will occur.

3.1.2 Drop velocity

Drop velocity is generally desired to be quite high to aid atomisation and the overall effectiveness of the suppression system. The droplet size must be considered as smaller droplets have a greater initial velocity but the velocity diminishes quickly, whereas larger droplets have a lower initial velocity but maintain velocity for longer. Tests must be undertaken to ascertain the most suitable method for the task.

3.1.3 Spray pattern and spray pressure

Nozzles are generally the defining factor of producing *spray pattern*. Full cone nozzles produce round sprays and provide high velocity for travelling over distances. Hollow cone nozzles generally produce a ring of mist that is more suitable for dust that is widely dispersed. Flat spray nozzles produce an easier controlled spray pattern which can be positioned to the exact source of the dust particles. Full cone and flat spray nozzles are approximately two thirds as effective as hollow cone nozzles (Bartell and Jett, 2005). The design of the nozzle must take these characteristics into consideration. Atomising nozzles are often quite complex and very expensive. Working with sound wave technology or electrostatic charging to operate atomising nozzles requires very high water pressure that could cause problems if the nozzles are damaged or become clogged. In addition, the system must be compact, relatively simple to use to aid maintenance and make the system less susceptible to damage.

As a result, this research has investigated the workings of a *paint spray gun* that delivers a variable fine spray of paint using compressed air. Paint is normally a fluid but paint guns convert paint into tiny drops similar to mist. The paint can be substituted for water to

produce a fine mist of water suppressant. A typical paint gun uses compressed air as low as 70 to 140 kPa to atomise and propel the paint (Arikan and Balkan, 2006). This means that a small compressor can be used to propel the water. As a paint gun is normally gravity fed or works on a venture, therefore, a low pressure, low flow water pump may be used to reduce the size of the operating system from the existing excavator mounted dust suppression system. This also reduces the need for a complex nozzle, as a paint gun nozzle is very simple to manufacture (see Figure 1) (Schmon and Kruse, 2007). It also provides the option of an adjustable nozzle or interchangeable caps to alter the characteristics of the spray.

Figure 1: Paint spray gun nozzle

3.2 Dust Analysis Solution

An investigation such as this requires effective analysis to produce a valid argument. To produce an effective and valid report, an air monitoring survey must be undertaken. There are four steps to produce a suitable air monitoring survey (Vallero, 2007). These are:

(i) Choose the parameters to be measured (particulate matter, toxins, pollutants, etc.);

(ii) Select the sampling sites because it is very important to understand how the air to be monitored behaves under certain conditions such as the position of the equipment;

(iii) The duration of sampling must be clearly defined: whether a random sampling method or long-term method is used depends on the constraints of the test and the environment;

(iv) Select the right equipment because there is a vast choice of equipment for dust monitoring.

The choices made for the above steps will lead the user to select the most appropriate equipment for the task.

To relate the steps in the case study's investigation (see section 5), the parameter to be measured was the dust produced by the demolition equipment, as the dust produced by the equipment was in small quantities. The sampling site was as close to the equipment as possible whilst maintaining a safe distance from the working equipment. Considerations must be made for wind disruption and also changes in the environment during the tests. The sampling schedule and method was a systematic approach: as the dust was not continually produced, a periodic sampling method was used. The equipment for this investigation was suitable for the environment, as well as portable and has the ability to sample periodically.

3.3 Particle Analysis Solution

A conventional method of analysing particulate matter is the gravimetric method (Pope III et al., 2009): utilising a pump to draw air through a filter into a collecting device that can be measured in weight. This method is suitable for long-term dust monitoring by giving a total amount of dust. For this reason, the equipment chosen for the case study to test the developed prototype is Turnkey's DustMate (Turnkey, 2002a) which is a hand-held detector ideal for short-term sampling.

The DustMate is also used to measure particulate matter such as "inhalable" and "respirable". In accordance with De Vocht et al. (2009) and Linnainmaa et al. (2007), inhalable is defined as the fraction of dust particles that enter the body but are stopped by the upper respiratory system. Respirable is defined as the fraction of dust that enters the body, is unstoppable by the upper respiratory system and enters the lungs. The highest

readings for both inhalable particles and respirable particles were recorded in the case study during an 8 s sample taken by the DustMate. This has provided results that included high values and low values resulting in a more accurate measurement than that of the collection method.

For the purpose of the tests in the case study, the user of the DustMate was required to wear personal protection equipment (PPE). Current UK regulations state that a person cannot be exposed to concentrations higher than 10 mg/m^3 of inhalable dust and 4 mg/m^3 of respirable dust (HSE, 2004). During the tests, if the readings from the equipment came close to these action levels, a P3 dust filtration mask must be worn by the user because P3 filter masks are guaranteed to protect the user from dust up to thirty times the occupational exposure limits (Turnkey, 2002b). Due to the importance of this action, a dust alarm was used for activating the DustMate to warn the user if the concentrations reached these levels (Turnkey, 2002b).

4 THE METHODOLOGY AND ITS IMPLEMENTATION

The theory surrounding this work is to develop a compact excavator mounted dust suppression system to effectively suppress dust particles during the demolition process and construction activities. However, the efficiency of a compact suppression system depends on the water storage and the spray nozzle.

In order to improve the existing excavator mounted dust suppression system, the proposed work is focused on the redesign of the system to suit a mini excavator. The general methodology for this approach was adopted from Larman's waterfall method (2003). The method takes one step at a time in a sequential manner, as shown in Figure 2.

Figure 2: The overall methodology (adopted from Larman (2003))

4.1 Customer Needs

The inspiration for this investigation was propagated by a recent demolition project carried out by PTS Ltd. The project required a 50 t excavator with hydraulic breakers to demolish a single span concrete bridge, as shown in Figure 3.

Figure 3: Bridge demolition

After the demolition process, PTS Ltd indicated that a new system is needed with the following attributes:

(i) a dust suppression system mounted to the excavators to keep dust down;

(ii) the system would need to be compact and;

(iii) the system would need to be durable enough to withstand the constant abuse.

Once the customer's needs were established, the specific aims and constraints of the system could be defined. For the purpose of this investigation, a mini excavator was used for cost reasons. The specific aims of the design are:

(i) dust particle release must increase significantly;

(ii) the system must be compact and be able to minimise the need for the refilling of water and;

(iii) the system itself must be durable enough to withstand constant use in the demolition process.

In addition, the mini excavator has very little space to mount a water storage device. As a result, the device was designed to mount onto the roof of the excavator.

4.2 Concept System Design

The design aims and constraints have defined that the proposed system would use a minimal amount of water and a storage tank that fits onto the roof of the excavator. Furthermore, the disadvantages of conventional dust control are:

(i) it dampens the material before it is disintegrated, thus minimising the release of dust particles and;

(ii) it requires large fans to blow water mist at airborne particles.

Therefore, the proposed design must resolve these two criteria so that a relatively small amount of fine water mist will spray at the hydraulic breaker to suppress dust particles as soon as they become airborne without reducing visibility or using excess water or creating slurry.

Previous attempts at excavator mounted dust suppression systems have used hydraulic motors to run high pressure water pumps. However, these pumps are very expensive, heavy and require hydraulic power from the excavator to operate. For these reasons a unique water and air dual atomising system was proposed, as shown in Figure 4. The new system uses a 12 V low pressure, low volume water pump where water can be fed into a specially designed nozzle where it meets the air fed from a compressor. The nozzle has been designed to work in a similar way to a paint spray gun which uses air to break the flow of the water to form a fine mist.

Figure 4: Concept dust suppression system

4.3 Concept Prototype Design

There are four main components for designing the prototype: (a) the water storage tank; (b) the water pump; (c) the compressor and; (d) the nozzle. One of the requirements of the prototype is to mount the water storage tank on top of the roof. Therefore, a frame has been designed to carry the water storage tank, compressor and the water pump. The nozzle can then be mounted remotely at the hydraulic breaker during the testing process.

The water storage tank has been designed with the following two aspects:

(i) To be as large as possible to avoid standing time of the excavator for re-filling;

(ii) The excavator must be stopped every hour to grease the hydraulic breaker and this stop could also be used to refill the water storage tank.

After initial testing using a paint spray gun, it was estimated that the water consumption was approximately 180 L/h. Hence, a prototype water storage tank with a capacity of 200 L has been constructed. Due to the additional mass added to the roof on the excavator, the water storage tank was built with the same size and shape of the cab footprint.

In comparison to the water storage tank, the compressor and water pump are considered to be lightweight items, thus, they were mounted at the back of the cab. All the components were mounted in a durable frame to carry the components and would be durable enough to withstand impacts during the demolition process. Figure 5 shows how the prototype concept was fitted to the excavator.

Figure 5: Concept prototype fitment

4.4 Final Prototype Design and Digital Model Analysis

The final design for the prototype carrier frame (a) and the components (b) (c) is shown in Figure 6. Two different nozzle designs were analysed to determine their efficiency relative to one another. Both designs are very similar with one particular characteristic: the angle at which the air impacts on the water differs for each nozzle. Each of the two nozzles has an air/water impact angle of 45˚ and 60˚, respectively. Figure 6 (d) displays the two designs and a cross section of the 45˚ nozzle showing how the nozzles would work.

The proposed final design has satisfied the customer's needs. The design aims complied with all of the design constraints and dust particles were suppressed using this method. The prototype has been suitably designed to not interfere with the excavator during the demolition process.

Figure 6: Water tank and nozzle designs

The final design was analysed using a simulation method. For the flow simulation analysis, the nozzles were fitted with a cap on one end and a large tube on the opposite end. This allows the volume to be calculated and the specific flow analysis of the part determined by a CAE software. However, the simulation indicated that the water moved through the nozzle did not produce the desired mist and hence the results were not viable. For this reason, both nozzles have been manufactured and fully tested to determine their effectiveness via the case study as discussed in Section 5.

Further CAE simulation for vibration analysis on the frame was also carried out. In this instance, the constraints for the analysis of the frame are relatively simple: as there was no external force applied on the frame, it was merely a natural frequency investigation. The four anchor points were used as fixed constraints and gravity was added as the second constraint. The results from the vibration analysis indicate that the frequencies to be avoided as they might excite the natural frequencies of the frame are 41.42 Hz, 56.97 Hz, 63.47 Hz and 84.28 Hz. The maximum frequency of the hydraulic breaker is 20 Hz, therefore none of these frequencies would have excited the frame assembly.

4.5 Prototype Manufacture

The prototype has been designed to the requirement that the fitting and removal operations are as effortless as possible. Firstly, the carrier frame and water storage tank were separated so that the carrier frame could be mounted to the excavator and then the tank could be lifted in and secured in place (Figures 7 (a) and (b)). Once the carrier fame and tank were fitted to the excavator, the nozzle base was mounted to the hydraulic breaker using a welded bracket. The pipes were then secured to the excavator using cable ties. The completed prototype rig was fully fitted to the excavator, as displayed in Figures 7 (c) and (d). For the purpose of this investigation, the power supply for the prototype was provided by a forklift truck due to the confined battery box and low accessibility of the battery itself.

Figure 7: The prototype system fitted into a mini excavator

5. CASE STUDY

Testing was carried out using a mini excavator complete with hydraulic breaker to break pieces of concrete off the concrete blocks. The operator was instructed to produce as

much dust as possible by lightly chipping at the top surface of the concrete block. The procedure used to record the results for each test was as follows:

1. Firstly, a background dust check was taken and confirmed that the concentrations of dust in the air were negligible;
2. Secondly, a baseline dust analysis test was carried out determining the concentrations of particles produced when no dust suppression was used. The prototype and each nozzle was then tested on two flow rates at 22 L/h and 44 L/h;
3. Finally a test was carried out using a hosepipe with a flow rate of 1360 L/h to provide data on a current dust suppression technique. Subjective and photographic data was recorded for each test to provide further discussion points to the raw analysed data.

To assist with the investigation into the prototype validity, subjective and photographic data was collected from the mini excavator operator to provide further discussions during the raw data analysis process. For example:

- For the test with the 45˚ nozzle and water flow rate of 22 L/h: the operator commented, “the mist kept the dust down quite well but when a sudden burst of dust appeared the sprayer could not suppress it. No slurry was formed which was good”.
- For the test with the 60˚ nozzle and water flow rate of 22 L/h: the operator commented, “the dispersal of this sprayer was much greater than previous tests. A wider range of mist was created and it didn’t seem to keep the dust down quite as well as the previous tests. Again, no slurry was produced”.

Results were recorded using the DustMate dust monitor to determine the concentrations of “inhalable” and “respirable” dust particles produced during the demolition process.

Table 1 displays the data collected for inhalable and respirable dust particle production measured in µg/m^3. The data from Table 1 represents inhalable dust concentration. An easy way to simplify the results would be to eliminate the large numbers within the results by claiming that they were anomalies. However, these results are vital to the effectiveness of the system in order to determine how well the tested equipment has reacted to the fluctuation in dust production. For this reason, cumulative frequency graphs were plotted to display where high concentrations of dust particles might occur, as well as to reveal the overall trend of each test to determine the effectiveness of each dust suppression technique.

As the cumulative frequency plot is the sum of the previous points added to the current point, the plot with the lowest final value and the shallowest gradient will be the most effective test. Figure 8 (Charts 1 and 2) shows the cumulative frequency plots for inhalable and respirable dust results.

Table 1: Inhalable and respirable dust particle data in µg/m^3

Figure 8: Charts 1 and 2 - Inhalable and respirable dust

6 CONCLUSIONS AND FURTHER WORK

The tests were carried out under suitable conditions and yielded relevant and accurate data. The test has shown that the prototype is very effective in suppressing dust particles. The resulting data of both “inhalable” and “respirable” dust particles are shown in Figure 8 (Charts 1 and 2). It was found that the 45˚ nozzle is the most effective design and, most importantly, it is much more effective than a conventional suppression system. This is because the prototype was working as soon as the breaker started breaking the concrete

and the first particles released were suppressed almost immediately. In addition, there were fluctuations in the release of dust particles caused by dry voids. However, the prototype fitted with a 45˚ nozzle could overcome these fluctuations. The difference in the 45˚ and 60˚ nozzles was evident during the two 44 L/h flow tests. The 45˚ nozzle suppressed the sudden release of dust far better than the 60˚ nozzle. The second determinant required from this testing was that of water consumption and the production of slurry. In accordance with the mini excavator operator's comments, slurry was not produced by the prototype during any of the tests. This means that sufficient water was used to suppress dust but water was not excessively wasted. There are also environmental benefits and monetary savings due to this reduction in water usage. The cost of water for commercial usage in the UK is GBP 2.17/m^3 (Wessexwater, 2013), because 1.0 L is equivalent to 0.001 m^3, the approximate cost of water in the UK for commercial usage in GBP/L is equal to 0.00217, therefore:

- The prototype costs (44 L × 0.00217 GBP/L × 8 h) = 0.76 GBP per 8 hour shift;
- The conventional method costs (1360 L × 0.00217 GBP/L × 8 h) = 23.6 GBP per 8 hour shift.

The prototype system with a 45˚ nozzle at 44 L/h flow rate (excluding diesel costs etc.) costs approximately 30 times less to operate and is equally effective at reducing airborne particulate matter.

The investigation proved that the proposed prototype has been effective at suppressing the dust generated during the demolition process. The findings show that the proposed prototype has been effective in local dust suppression that is particularly more beneficial than the high reach machines used extensively in demolition practices today. Further work could be carried out on the nozzles because the effectiveness of the nozzles in this investigation changed dramatically due to their geometric features.

ACKNOWLEDGEMENTS

The authors would like to thank the following for assisting their research activities in this area: A5 Hydraulics, Northern Breakers Ltd and MIS Environmental for the loan of their DustMate Dust Monitor; Tyne Tees Demolition Ltd (now PTS Demolition and Dismantling Ltd) for their inspiration, guidance and the use of their facilities and equipment throughout the project. This research received no specific grant from any funding agency in the public, commercial, or not for-profit sectors.

REFERENCES

Ahn, C., Martinez, J.C., Rekapalli, P.V., Pena-Mora, F.A., 2009. Sustainability analysis of earthmoving operations. Proceedings of the 2009 IEEE Winter Simulation Conference (WSC). 2605-2611.

Ahn, Y.C., Jeong, H.K., Hee, S.S., Yu, J.H., Gil, T.K., Seong, I.C., Jae, K.L., Chul K., 2006. Design and performance evaluation of vacuum cleaners using cyclone technology. Korean. J. Chem. Eng. 23(6), 925-930.

Arikan, M.A., Balkan, T., 2006. Modelling of paint flow rate flux for elliptical paint sprays by using experimental paint thickness distributions. Ind. Robot: an Int. J. 33(1), 60-66.

Bartell, W., Jett, B., 2005. The technology of spraying for dust suppression, Cement Americas, Primedia Business Magazines Media, 1-3. <http://business.highbeam.com/3375/article-1G1-132353121/technology-spraying-dust-suppression> [accessed 16 November 2012].

Copeland, C.R., Eisele, T.C., Kawatra, S.K., 2009. Suppression of airborne particulates in iron ore processing facilities. Int. J. Miner. Process. 93, 232-238.

De Vocht, F., Hirst, A., Gardner, A., 2009. Application of PUF foam inserts for respirable dust measurements in the brick-manufacturing industry. Annu. Occup. Hyg. 53(1), 19-25.

Dimari, G.A., Hati, S.S., Waziri, M., Maitera, O.N., 2008. Pollution synergy from particulate matter sources: the harmattan, fugitive dust and combustion emissions in Maiduguri Metropolis, Nigeria. Eur. J. Sci. Res. 23(3), 465-473

Driussi, C., Jansz, J., 2006. Technological options for waste minimization in the mining industry. J. Clean. Prod. 14(8), 682-688.

Edwards, D.J., Holt, G.D., Harris, F.C., 2002. Predicting downtime costs of tracked hydraulic excavators operating in the UK opencast mining industry. Constr. Manag. Econ. 20(7), 581-591.

Gambatese, J.A., James, D.E., 2001. Dust suppression using truck mounted water spray system. J. Constr. Eng. Manag. 127(1), 53-55.

Gunson, A.J., Klein, B., Veiga, M., Dunbar, S., 2012. Reducing mine water requirements. J. Clean. Prod. 21(1), 71-82.

Holman, C., 2012. The health impact of demolition dust. Health Estate. 66(8), 72.

HSE, 2004. Control of substances hazardous to health regulations, Operational guidance and advice (200-299), OC 273/20 (Version 2). <http://www.hse.gov.uk/foi/internalops/ocs/200-299/273_20/index.htm> [accessed 25 March 2013]

HSE, 2010. Dust control on cut-off saws used for stone or concrete cutting, Construction information sheet, No.54, HSE Books, Series Code CIS54, Stock Code CIS54REV1. < http://www.hse.gov.uk/pubns/cis54.pdf> [accessed 16 November 2012].

Innovative Technology, 1998. Concrete Dust Suppression System, U.S Department of Energy, OST reference 2154.

Kaveri Ultra Ltd, 2008. Dry fog dust suppression system, dust control solution for 21st century. <http://www.kaveri.in/pdfs/DFDSS.pdf> [accessed 16 November 2012].

Larman, C., 2003. Agile and Iterative Development: A Manager's Guide, first ed. Addison-Wesley Professional.

Linnainmaa, M., Laitinen, J., Leskinen, A., Sippula, O., Kalliokoski, P., 2007. Laboratory and field testing of sampling methods for inhalable and respirable dust. J. Occup. Environ. Hyg. 5(1), 28-35.

Makuch, Z., Karyampa, M., 2012. Environmental and Energy Law, first ed. Wiley-Blackwell.

Mondal, D., Datta, A., Sarkar, A., 2004. Droplet size and velocity distributions in a spray from a pressure swirl atomizer: application of maximum entropy formalism. Proc. Inst. Mech. Eng. Part C: J. Mech. Eng. Sci. 218(7), 737-749.

Nij, E.T., Hilhorst, S., Spee, T., Spierings, J., Steffens, F., Lumens, M., Heederik, D., 2003. Dust control measures in the construction industry. Annu. Occup. Hyg. 47(3), 211-218.

Petavratzi, E., Kingman, S., Lowndes, I., 2005. Particulates from mining operations: a review of sources, effects and regulations. Miner. Eng. 18(12), 1183-1199.

Peterson, E., 2011. An aid to fugitive material control in coal ash applications. World of Coal Ash (WOCA) Conference. May 9-12, Denver, CO, USA.

Pope III, C.A., Ezzati, M., Dockery, D.W., 2009. Fine-particulate air pollution and life expectancy in the United States. N. Engl. J. Med. 360(4), 376-386.

Raring, D.L., 1998. Multi-chambered scrubbing apparatus for dust control. U.S. Patent No. 5,713,970.3.

Schmon, E., Kruse, A., 2007. Paint spray gun. U.S. Patent No. D552,715. 2 Oct. 2007.

Schweizer, R., Motter, J.W., 2001. Paint overspray exhaust air filter. U.S. Patent No. 6,231,646.

Sealpump, 2013. Dust control system. <http://www.sealpump.com/dust-control-systems.php> [accessed 12 April 2013].

Turnkey, 2002a. DustMate, airborne particulate monitors. <http://www.turnkey-instruments.com/images/documents/Turnkey-Dust-Monitors.pdf> [accessed 16 November 2012].

Turnkey, 2002b. DustMate operating instructions. <http://www.turnkey-instruments.com/images/documents/DustMate-Operating-Instructions.pdf> [accessed 16 November 2012].

Vallero, D., 2007. Fundamentals of air pollution, fourth ed. Academic press.

Wessexwater, 2013. Commercial charges explained 2013-2014. < http://www.wessexwater.co.uk/customers/threecol.aspx?id=306&linkidentifier=id&itemid=306> [accessed 12 April 2013].

Wu, J.M., Chen, J., 2011. Improving the design of a pickup head for particle removal using computational fluid dynamics. Proc. Inst. Mech. Eng. Part C: J. Mech. Eng. Sci. 225(4), 939-948.

Zhao, Z.Y., Zhao, X.J., Davidson, K., Zuo, J., 2012. A corporate social responsibility indicator system for construction enterprises. J. Clean. Prod. 29–30, 277-289.

Figure

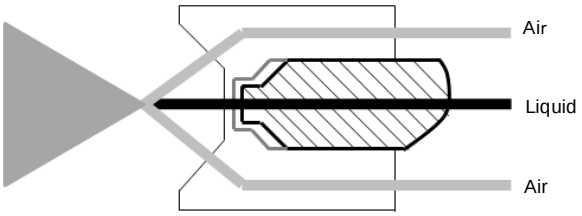

Figure 1: Paint spray gun nozzle

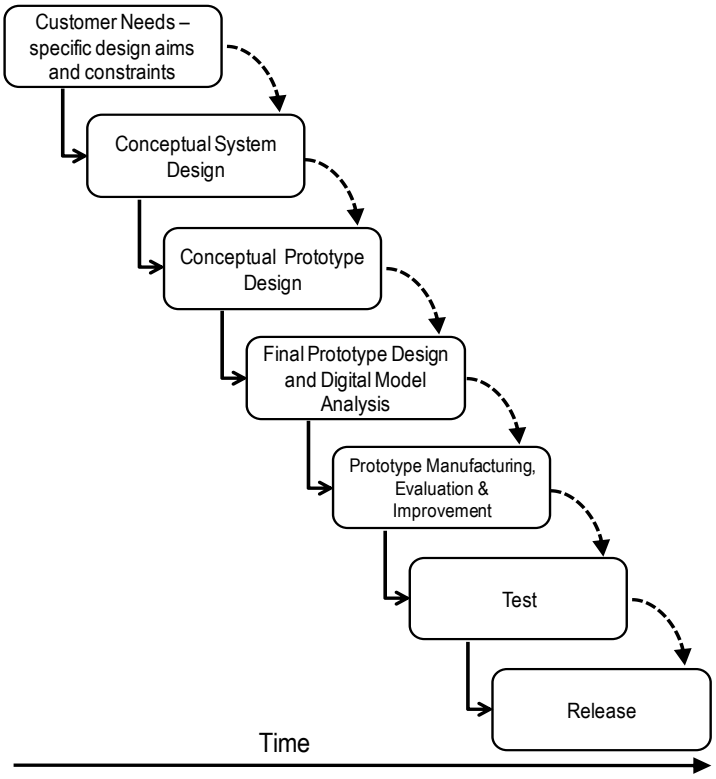

Figure 2: The overall methodology (adopted from Larman, (2003))

Figure 3: Bridge demolition

.

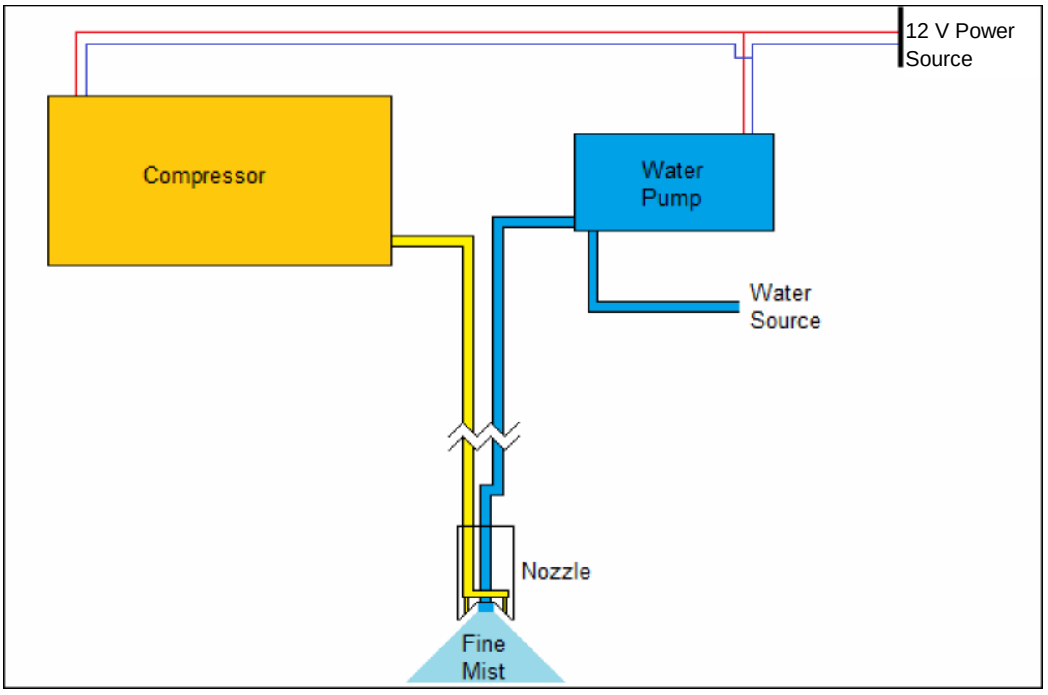

Figure 4: Concept dust suppression system

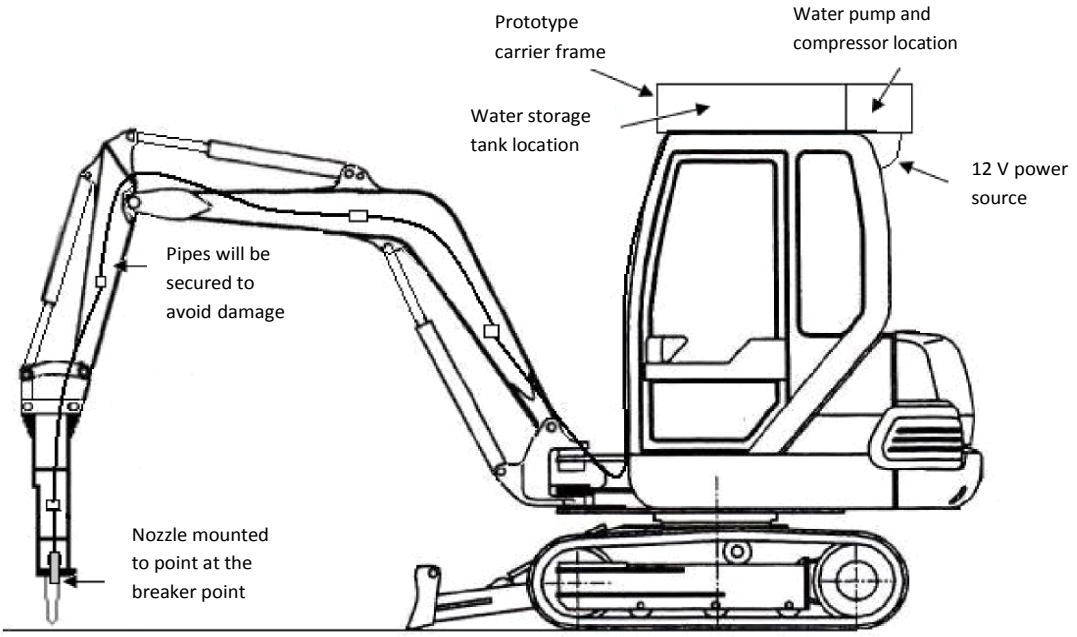

Figure 5: Concept prototype fitment

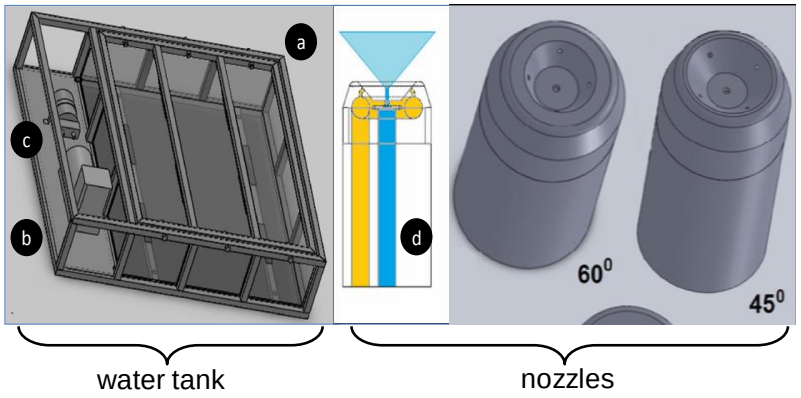

Figure 6: Water tank and nozzle designs

Figure 7: The prototype system fitted into a mini excavator

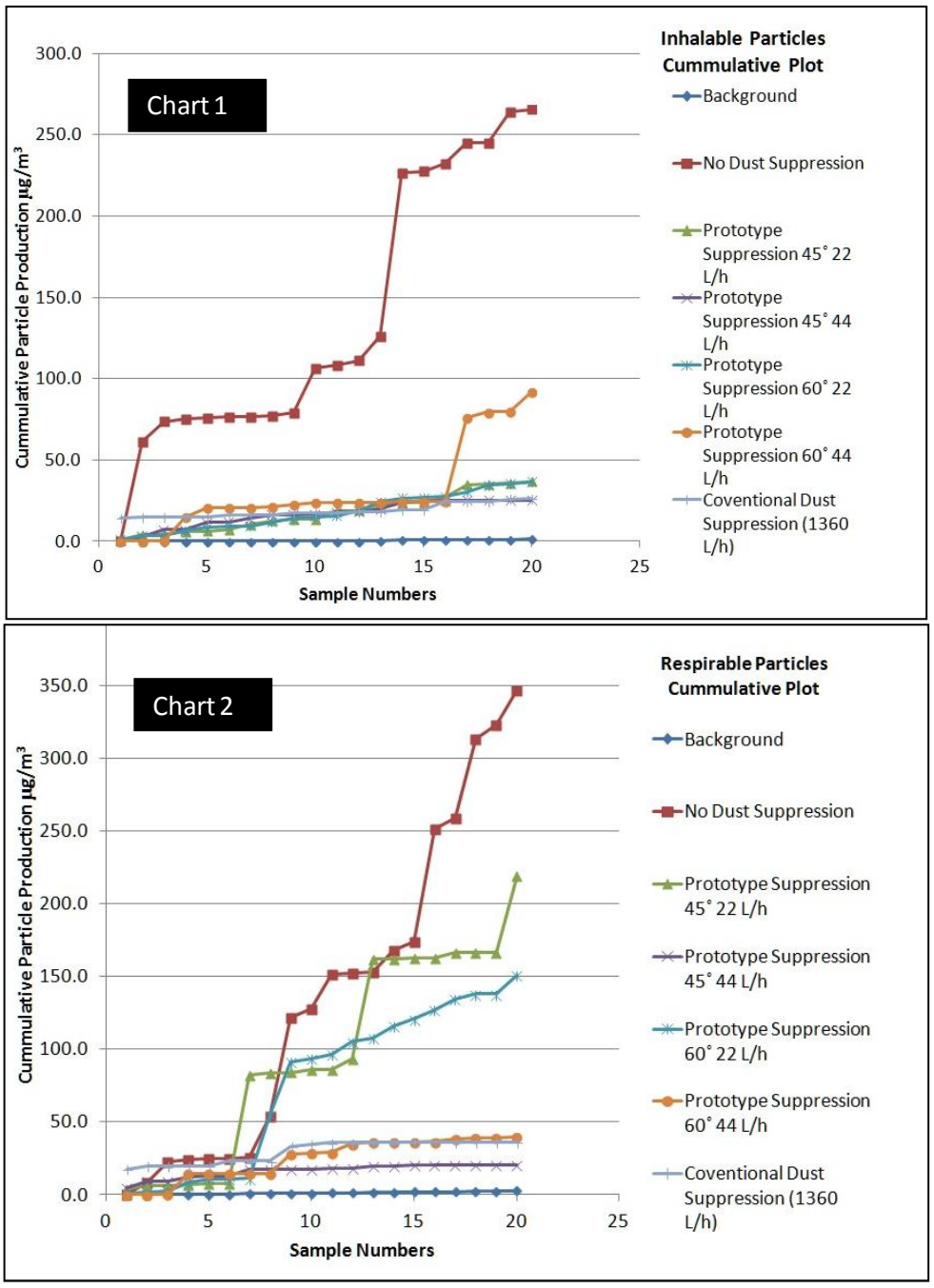

Figure 8: Chart 1 and 2 - Inhalable and respirable dust

Table

Background		No Dust Suppression		Prototype Suppression 45˚ 2.2 L/h		Prototype Suppression 45˚ 4.4 L/h		Prototype Suppression 60˚ 2.2 L/h		Prototype Suppression 60˚ 4.4 L/h		Coventional Dust Suppression (1363 L/h)	
Inhalable	Respirable	Inhalable	Respirable	Inhalable	Respirable	Inhalable	Respirable	Inhalable	Respirable	Inhalable	Respirable	Inhalable	Respirable
0.0	0.1	0.3	0.0	1.1	4.1	0.0	5.1	1.0	1.2	0.0	0.0	14.1	17.5
0.0	0.4	61.4	8.6	4.1	6.2	3.1	9.3	3.3	2.1	0.0	0.0	14.6	19.8
0.0	0.4	73.7	22.3	4.3	6.2	7.2	9.4	3.4	2.8	0.1	0.2	14.6	19.8
0.0	0.4	75.0	24.2	5.7	6.8	7.2	12.1	6.6	8.6	15.1	14.3	15.0	19.8
0.0	0.4	76.1	24.6	6.3	7.9	11.8	12.7	8.4	11.0	20.4	14.3	15.0	19.8
0.0	0.4	76.6	25.0	7.3	7.9	12.0	13.0	9.3	11.0	20.7	14.3	16.0	23.2
0.0	0.9	76.6	25.4	10.4	82.5	14.2	17.3	9.3	11.3	20.7	14.3	16.0	23.2
0.0	0.9	77.2	54.2	12.6	83.8	16.4	17.4	11.9	54.8	21.5	14.3	16.0	23.2
0.0	1.1	78.9	121.6	13.3	84.1	16.4	17.4	14.3	91.5	22.7	28.2	17.4	33.2
0.0	1.2	106.6	127.5	13.6	85.8	16.7	17.7	15.1	93.8	23.6	28.9	17.7	34.6
0.0	1.4	108.2	151.9	18.8	85.8	18.2	18.1	15.8	96.4	23.9	29.1	17.7	36.0
0.0	1.4	111.2	152.1	18.8	93.3	18.3	18.1	19.0	105.1	23.9	35.0	18.0	36.0
0.4	1.8	126.2	152.8	22.8	162.0	19.7	19.5	24.4	107.6	23.9	35.9	18.0	36.0
0.7	1.8	226.8	167.9	23.5	162.2	23.5	20.0	26.5	115.7	24.3	36.3	19.4	36.0
0.7	2.1	227.5	174.0	23.5	162.6	25.0	20.2	26.9	120.8	24.4	36.3	19.4	36.4
0.9	2.1	232.1	251.6	27.1	162.6	25.1	20.2	27.6	127.1	24.4	36.6	24.3	36.4
0.9	2.1	244.9	258.6	34.8	166.6	25.3	20.3	30.4	134.5	76.0	38.6	24.3	36.4
0.9	2.4	245.2	312.9	35.2	166.6	25.3	20.3	34.6	138.0	79.5	39.1	24.3	36.4
0.9	2.4	264.1	322.7	35.7	166.6	25.3	20.3	35.5	138.0	79.9	39.1	26.0	36.4
1.3	2.8	265.6	346.4	36.6	218.9	25.3	20.3	36.7	150.8	91.6	39.6	26.3	36.4

Table 1: Inhalable and respirable dust particle data in $\mu g/m^3$