The Reticulatus method for shear strengthening of fair-faced masonry

Marco CORRADI

Mechanical and Construction Engineering Department, Northumbria University Wynne-Jones Building, NE1 8ST, Newcastle upon Tyne, United Kingdom and Department of Engineering

Antonio BORRI

Department of Engineering, University of Perugia

Via Duranti, 93 06125 Perugia, Italy

Giulio CASTORI

Department of Engineering, University of Perugia

Via Duranti, 93 06125 Perugia, Italy

Corresponding Author, Telephone: + 39 (0) 75 585 3838, Fax. + 39 (0) 75 585 3897

email: giulio.castori@unipg.it

Romina SISTI

Department of Engineering, University of Perugia

Via Duranti, 93 06125 Perugia, Italy

KEYWORDS: Steel cords, lateral strength, historic masonry, mechanical testing

ABSTRACT

This paper presents the results of several experimental campaigns recently carried out by the authors and devoted to the investigation of the mechanical performance of wall panels strengthened by applying repointing mortar and high strength stainless steel or composite cords. The reinforcement system, known as Reticulatus, allows the reinforcement of regular and irregular-shape masonry walls, when the fair-faced aspect must be kept. In the perspective of using this reinforcement method, this article summarizes the research that has been done so far, presenting new original test results and discussing the design procedures. Twenty-two square wall panels were loaded in their plane by means of a single point load acting through the panel's diagonal. Experimental results are presented for four types of cord

reinforcement using matched samples, reinforced and not. Increases in shear strength from 15 to 170% were achieved for the strengthened panels. Each wall panel was loaded well into the lateral post-elastic regime and then unloaded. Experimental results were in good agreement with predictions from simple models which assume the wall panels to behave like a plate, neglecting the contribution of the repointing mortar, and accounting for the non-linear behavior of the masonry.

INTRODUCTION

Recent earthquakes in southern Europe have caused extensive damage to the historic building heritage. The quality of materials and construction is a key factor to understand the global behavior of historic buildings subjected not only to static loads but also to seismic actions. The poor quality in the mechanical characteristics of the masonry and the lack of the connection between vertical walls and between these and the horizontal elements have often been the cause of collapsing or of serious damage.

The presence in literature of procedures to reinforce masonry is very large. Along the methods available, those based on the application of composite materials (mainly FRP: Fiber Reinforced Polymer) were highly investigated in recent years. When addressing the problem of reinforcing historic masonry walls, it is possible to classify the retrofitting methods in two main categories aimed at increasing the masonry shear (in-plane) strength or at improving the wall behavior against out-of-plane collapse mechanisms. A variety of approaches has been used for in-plane strengthening of masonry walls with FRPs (Triantafillou 1990, Ehsani et al. 1999, Valluzzi et al. 2002, Corradi et al. 2002, Stratford et al. 2004, ElGawady et al. 2005). Usually FRP are externally applied using epoxy resins, but for high value, historically important buildings non-intrusive, reversible and localized reinforcement schemes are often advised.

FRP fiber strips are usually impregnated with epoxy adhesives using a rubber spatula and anchored by bond to masonry surface. While this method has been extensively researched and its effectiveness validated, the difficulty of removal and the long term behaviour of epoxy adhesives are major obstacles for widespread use and acceptance within heritage bodies. The utilization of inorganic matrices, based on hydraulic and cement mortars, is thus a desirable device to avoid the use of epoxy or organic resins (Prota et al. 2006, Papanicolaou et al. 2008, Borri at al. 2014, Gattesco et al. 2015, Carozzi and Poggi 2015).

Reinforcement against out-of –plane collapse mechanisms is more difficult to obtain, because this is affected by several parameters (mechanical properties of the masonry, grade of connection between load-bearing walls and between masonry wall leaves, seismic vulnerability, etc.). However a low level of connection between masonry leaves is considered a critical characteristic for multi-leaf walls and several authors have investigated the effect of the insertion of transversal composite connectors. Several numerical procedures have been also proposed for analysing the out-of-plane

(Velazquez-Dimas and Ehsani 2000, Milani 2009) and in-plane behaviour of FRP reinforced wall panels (Luciano and Sacco 1998, Gabor et al. 2006).

Traditional techniques, such as the local reconstructions (patching) of the masonry, the repairing of cracks by means of metal ties inserted into horizontal joint to tie across vertical cracks, the injection into the masonry of cement grout or lime-based mixtures (Modena 1994, Binda et al. 1997), steel-mesh jacketing (Corradi et al. 2008, Ashraf et al. 2012, Diz et al. 2015) may present similar limits and problems. Grout injections is an effective reinforcement method to increase lateral capacity of historic stonewalls. However, a preliminary analysis of the possibility for the injected grout to spread inside the masonry wall is needed. Therefore the choice of the grout according to the typology of the wall has an important place since it can govern whether or not the reinforcing is effective. Triple-leaf masonry wall panels are doubtless more appropriate compared to double-leaf walls (Binda et al. 1997).

Strengthening by steel jacketing of irregular shape stone walls is also an effective method to increase the walls' lateral strength and stiffness. A reinforced steel jacket is applied with a thickness of approx. 40-60 mm. However, this type of reinforcement produces very high increases in lateral stiffness and is very invasive and irreversible.

Interventions of historic constructions are also often based on aesthetical considerations. This is especially true in the case of irregular shape stone masonry in which it is sometimes desired to keep the exterior facing unaltered. In this area a very common intervention is joint repointing. The repointing of stone or brick walls can have an important effect on the appearance of the stone as well as its long term behavior. For this type of masonry, the technique of the repointing (Corradi et al. 2008, Maheri et al. 2011) that consists of stripping the mortar joints by removal of old or inappropriate mortar to a minimum depth of 40 mm or until sound mortar and then repointing the joints with a good quality mortar. Its effectiveness, however, is limited if the walls are not very thick. Repointing should be deep enough (40-60 mm) in order to reinforce the external masonry leaves effectively. Sometimes earlier repointing in inappropriate materials is so superficial that it can be removed easily.

The present work describes the results of several experimental campaigns carried out in recent years by the authors and devoted to the analysis of the structural performance of wall panels reinforced with steel or composite cords inserted into the mortar joints. The reinforcement system is proposed separately or in addition to other techniques (such as injections) and it allows the reinforcement of both regular and irregular shape masonry walls. In the perspective of using this mortar-reinforced repointing method more research is needed to explore the effectiveness and long term behaviour, for which only few contributions have been provided to date (Razavizadeh et al. 2014, Borri et al. 2015). This article summarizes the research that has been done on the use of steel or composite cords to increase the in-plane capacity of masonry wall panels, present new original test results and discuss the design procedures.

DESCRIPTION OF THE RETROFITTING TECHNIQUE

The strengthening technique known as Reticulatus consists of the inserting in the mortar joints, stripped to a depth of 40-60 mm, of a continuous mesh made from high strength steel or composite cords, the nodes of which, generally one every two, are connected to the other face of wall by means of transverse steel bars, in a number of 5-6 per m^2 according to the scheme in Figure 1. The cords are arranged in vertical and horizontal directions, forming approximately square meshes, the dimensions of which, normally 300-500 mm wide, depend on the size of the stones in the masonry, and, as a rule, must not be greater than the thickness of the wall.

The cords are connected to the transverse bars by means of eyelets in which the cords can slide: thus it is possible to apply a moderate tension, so as to make the mesh immediately functional. When the size of the stone walling material is such as to prevent the use of bars passing through the entire thickness of the masonry (Fig. 2a), the connection can be made with bars about 2/3 as long as the thickness of the wall, anchored with the injecting of non-shrink mortar or epoxy resin (Fig. 2b). With the aim at connecting the cord-reinforcement to the existing masonry and at increasing the level of connection between masonry wall leaves, it is advised to use an epoxy mortar, but when this is not possible a non-shrink cement-based mortar could be also used. The final application of mortar, which completely covers both the cords and the heads of the transverse bars, makes it possible to preserve the fair-faced aspect of the masonry. The mechanical properties in terms of compressive and indirect tensile strength of the mortars used to repoint the joints are shown in Table 1. All used mortars were lime-based, specifically designed for use with historic masonry.

The strengthening procedure can be summarized as:

1. stripping of the mortar joints to a depth of approximately 40-60 mm, being careful not to remove the original mortar where it is particularly strong;
2. hydro-blasting of the stripped joints, doing this operation a few hours before the subsequent application of the new mortar;
3. inserting of the transverse elements (threaded metal bars, complete with nut, washer and cord locking device) in meshes evenly spaced when it is possible;
4. fixing of the bars to the wall using specific non-shrink mortars or epoxy resins;
5. first repointing with new mortar;
6. insertion of the steel or composite cords into the stripped joints, passing them through the cord locking devices, proceeding horizontally or vertically across the entire facing being reinforced;
7. tightening of the nuts to lightly tension the cords;
8. final repointing of the mortar in the joints, completely covering both the cords and the heads of the eyebolts or bars.

In order to achieve an adequate increment in the wall lateral capacity, the cord reinforcement should be applied on both façades. However if it not necessary to keep the exterior facing unaltered for one of the two façades (usually for the indoor one this is not required), it is possible to apply a Fabric Reinforced Cementitious Matrix (FRCM) composite based on a layer of cement-based mortar jacketing reinforced with a FRP grid (Badaeidarabad et al. 2013, Borri et al. 2010, De Felice at al. 2014). This strengthening technique combines the Reticulatus system on one wall face with the application of a coating about 25-35 mm thick reinforced with a FRP grid on the other face.

Four different cords were used in the experiments to reinforce the masonry, each constituted of a different material and/or with a different cord diameter. Cord A and B are made of steel (Figs. 3a and 3b), whereas Cord C and D (Figs. 3c and 3d) are textile ropes made of PBO (p-phenylene-2,6-benzobisoxazole). Six specimens from each cord type were tested in tension using an Istron testing machine. Results in terms of failure tensile load, tensile strength and Young's modulus are listed in Table 2.

Connectors were made of 8 mm-diameter stainless steel bars. Cords are passed through a ring at the end of the connector, so that by tightening a nut at the opposite end, it is possible to lightly pretension the cords. Uniaxial yield and tensile strengths of the connectors, measured by using an universal testing machine on 10 specimens, were 851 and 1109 MPa (Coefficient of Variation (CoV) is 0.9 and 3.2%, respectively) which is more than sufficient to absorb elastically the tensile stresses between masonry leaves. Young's modulus was 189 GPa.

Fields of application

Despite some advantages associated with the use of this technique, the relevant strengthening techniques are not entirely problem-free. Some drawbacks related to installation issues and aesthetic requirements may represent an obstacle, which limits the use of this technique.

In case of thin mortar joints (usually less than 8 mm thick) the repointing, and consequently the retrofitting technique, should be avoided, since any attempt to repoint usually results in some form of inappropriate strap pointing on the surface of the masonry, producing consequent damage to the stone. There are certain types of mortar, in fact, that are so hard, they can be raked out but it would take so much time, that it's generally not cost-effective.

Because many historic buildings are restricted by protection and heritage conservation authorities, which in many cases do not authorize an extensive use of the repointing technique, the requirement for reversible interventions as well as the use of historically or geographically-correct mortars, can limit the application of the Reticulatus technique. However compared to more traditional or moderns retrofitting methods, with sometimes more significant drawbacks and limitations, the Reticulatus technique could deserve some attention from the construction industry and technicians.

MECHANICS OF A REINFORCED WALL PANEL

From a mechanical perspective, the benefits of this Reticulatus method are: 1) improving the mechanical characteristics, mainly the shear strength; 2) increasing the level of connection between wall panels and producing an enhancement of the building behaviour against out-of-plane actions; 3) providing the masonry with a tensile strength (critical for irregular stonemasonry, where the vertical joints are often not staggered). A positive confinement effect is also activated on compressed wall panels due to the presence of the cords and connectors encircling the masonry material.

Masonry is normally able to resist only the compressive forces. The application of the cord reinforcement may empower masonry to resist tensile and shear stresses and to exhibit a mechanical behaviour similar to Reinforced Concrete. The non-straight shape of the cords (because the cords are so small, they can be easily bent in order to be embedded into the mortar joints) does not compromise the reinforcement effectiveness: when subjected to a shear or compression load, the wall panel will achieve a condition of equilibrium for which the cords will absorb the tensile stresses and masonry the compressive ones.

Shearing forces

When a shear load is carried through the strengthened wall panel, the mechanisms by which the cord strengthening acts consists of various elements and/or regions that are assumed to form in a deep section. These elements primarily include struts, ties, and nodes. The “struts” represent the compressive stress fields in the member, with compressive stresses acting perpendicular to the principle tensile stresses. Compressive stresses are mainly absorbed by the masonry material and tensile stresses by the cord reinforcement (Fig. 4). The typical failure modes of a strut are crushing and severe cracking, in which the principal tensile stress pulls apart the member and may cause it to crack longitudinally, or, if enough transverse reinforcement is provided, the member may crush.

The cord reinforcement is also able to contribute to prevent the collapse of the wall during the post cracking phase and it improves the ductility behaviour of the cracked wall panels.

The shear behaviour of a reinforced masonry wall panel was based on extensive diagonal tension tests performed in the period 2008-2015. Both analysis of test results and the mechanics of a wall panel reinforced with the Reticulatus technique will be discussed in the following sections. For shear tests, the panels were based upon a 1.2 square. Twenty-two masonry panels were tested. All wall panels were tested in diagonal tension in accordance with ASTM E519 (2002) and RILEM TC 76-LUM (1994). The shear stress τ was calculated using the experimentally measured diagonal force P using (Borri at al. 2008, 2014, Almeida et al. 2015):

$$\tau = 1.05\frac{P}{A_n} \qquad (1)$$

and the shear strength τ_0:

$$\tau_0 = \frac{f_t}{1.5} = \frac{P_{\max}}{3A_n} \tag{2}$$

where f_t is the tensile strength of the masonry, P_{max} is the maximum diagonal load and A_n is the area of the horizontal section of the panel.

As regards the tangential elastic modulus, secant elasticity modulus was computed using two points located along the stress-strain curve at 10% and 40% of the maximum shear stress:

$$G = \frac{1.05(0.4P_{\max} - 0.1P_{\max})}{A_n(\gamma_{0.4P\max} - \gamma_{0.1P\max})} \tag{3}$$

where $\gamma_{0.4P\max}$ and $\gamma_{0.1P\max}$ are the angular strains at 40% and 10% of P_{max}, respectively.

Using ε_c and ε_t to indicate the compressive and tensile strain along the panel diagonals (elongation is assumed a positive deformation), the shear strain γ is defined as:

$$\gamma = |\varepsilon_c| + \varepsilon_t \tag{4}$$

RESULTS AND DISCUSSION

Early tests

Compression, shear and bending tests were first performed on-site in 2009-2011 and partially reported in Borri et al. (2010). For the evaluation of the compression behaviour flat-jack testing (Gregorczyk and Lourenco 2000) was used on five wall panels. The compression tests were carried out on the 14th-century city walls of Trevi (Umbria – Italy). The masonry was made of roughly dressed coursed hardstone rubble won from local quarries. The principle of the test setup and the masonry wall are shown in Figure 5a. The mean dimensions of the stone-blocks were approx. 18 x 12 x 10 cm. Masonry portions of walls about 50 cm high were tested by being subjected to compression using two semi-oval 350x260x3 mm (length x width x thickness) flat jacks. Initial vertical distance between 3 pairs of gauge points was 300 mm. During the test the values of the applied vertical stress and the deflection of the masonry were recorded at each load step to plot the stress-strain diagrams, from which the compression resistance and Young's modulus calculated at 33% and 50% of the maximum stress were determined. The first wall portion was tested without strengthening, to determine its compressive strength. The remaining four were consolidated respectively with deep repointing of mortar joints (2 specimens) and Reticulatus technique (2 specimens). Mortar 1 was used for the repointing (Tab. 1) For the walls reinforced with steel cords (cord A), it was used a quantity of cord of 12 m/m^2 of masonry wall. As for the failure

mechanism, it was seen that a series of vertical cracks formed between the two flat jacks. Furthermore, there was no substantial differentiation of the type of failure between the unreinforced masonry, the repointed masonry and the masonry reinforced with steel fibers. Whereas in the cases of the unreinforced masonry and of the repointed joints the failure occurred with a small number of fairly large vertical cracks, in the case of Reticulatus reinforced masonry a larger number of smaller vertical cracks occurred, indicating an improvement in the mechanical behavior of the masonry due to a probable decrease in the concentration of the maximum stresses within the masonry. The application of the compression load did not cause cracking in the stones but only in the mortar joints. Test results are shown in Table 3. Since the number of specimens tested was limited, results should be confirmed by a larger experimental programme. However, that the emerging line seems clear and quite correct: upon analysis of the results, it can be stated that the Reticulatus technique is able to increase significantly the compressive strength σ_{max} of the masonry: a mean value of 1.286 MPa was measured, corresponding to an increase of compression strength of 116% compared to the unreinforced panels (σ_{max}=0.595 MPa) . Furthermore, the mean increase of the masonry reinforced with repointing alone (σ_{max}=0.832 MPa) is about 40% compared to the unreinforced panel. With regard to the elastic moduli, the results show a significant scattering in the data. An unexpected high value of normal stiffness was observed in Test No. SRE 05. This value of the elastic modulus should be mainly attributed not only on the new mortar but also on the presence of large stones between the two flat jacks.

A first series of shear tests (diagonal compression) were also performed on-site on 9 stone masonry panels cut from three historic buildings located in Pale, Foligno (both in Umbria, Italy) and L'Aquila (Abruzzo, Italy) (Speranzini et al. 2011). Each test is referred by a multi-letter code: the letter designations MP, MF or MA are used for panels cut in Pale, Foligno and L'Aquila, respectively. UR or R letter designations are deployed to identify un-reinforced and retrofitted panels; A or J for panels reinforced with the Reticulatus method using cord Type A (Tab. 2) or only with deep repointing of mortar joints, respectively.

All panels were cut from un-damaged walls and tested on-site. These walls are composed by two or three weakly connected leaves and a lime-based mortar used to bond roughly cut hardstones. Considering the inconsistency of the mortar (aerial lime-based mortar) it was not possible to carry out a mechanical characterization. Stone cylinders were obtained from Foligno and Pale buildings and a compressive strength greater that 35 MPa was found. The masonry panels in Pale, having a thickness of 52÷53 cm, consisted of small (larger length 180-200 mm) roughly cut stones (travertine and white limestones) and solid bricks with no connection between leaves. The masonry of Foligno building was also made with pink calcareous roughly cut stones with a larger length of 300 mm. Finally the panels of the L'Aquila building were made of a triple-leaf stonewall with a thickness varying between 62 and 68 cm. In order to reinforce the panels, a quantity of cord of 18÷22 m for each face was used). The reinforcement ratio ρ_t defined by the

area fraction of the cord (total cord cross section / A_n) was between 0.0012 and 0.0018 % depending on panel thickness. The results are shown in Table 4, from which it can be seen that the Reticulatus technique applied have significantly increased the shear strength. The shear strength of the un-reinforced panel of Pale (MP-01-UR) was extremely low (0.0108 MPa). This was due to the low masonry quality made of very small rubble stones and pulverulent mortar. The Reticulatus and the deep repointing caused an increase in the shear strength of 170 and 70% respectively, compared to the unreinforced panel (Figs. 5b and 6). The typical shear cracks have a slope of 45°, so they find a preferential direction of propagation inside the mortar joints, without affecting the stones. With regard to the panel reinforced with Reticulatus, the cords partially de-bonded and separated from mortar only in the area involved by the formation of the diagonal mortar cracks and they did not fail in traction. The action of the cord locking devices contributed to keeping the cords in the mortar joints. They were also able to prevent the separation of the masonry leaves.

Similar results and failure mechanisms were found in Foligno and L'Aquila (MF ans MA-series) (Tab. 4). Of the four panels in Foligno, the first three were tested without strengthening. The remaining one was retrofitted with the Reticulatus technique and an increase in strength of approximately 140% was measured.

Finally, the last two diagonal tests were carried out on the L'Aquila building (MA-05-UR, MA-02-R-A). One panel with a thickness of 62 cm was reinforced with the Reticulatus technique. In this case the shear strength change from the un-reinforced panel to the reinforced panel, is from 0.0335 to 0.0641 MPa (+91%); this represents a lower shear strength increase than the one observed during the previous tests, probably due to the larger panel thickness (lower reinforcement ratio). On the contrary, the shear stiffness exhibits a rather moderate increase from 169 MPa (un-reinforced panels) to 776 MPa (reinforced panels). It is also important to note that the steel cords did not fail in tension until a very large plastic deformation occurred: the failure mode was governed by cracking in the repointing mortar joints with a progressive transfer of tensile stresses form the mortar to the steel cords.

Bending tests were also conducted on two double-leaf rubble stone panels built on-site at Pale with the same roughly cut limestone coming from the demolition of pre-existing nearby walls. The two panels were rotated and placed horizontally being subjecting to a particularly severe flexural loading. Specimen one (Test 1) was without any cross stone elements whereas in specimen two (Test 2) the two leaves are weakly connected. Once they had set, the two panels were reinforced with the Reticulatus technique, using cord A (Tab. 2). In the first of these flexural test masonry panels 12 cords/m of wall were inserted longitudinally in the compression side and 24 cords/m in the tension side, grouped in groups of four. In the transverse direction, 24 cords/m were again passing through the cable locking device, and were arranged so as to create a reticular mesh that wraps around the panel. The second of these flexural test masonry panels was reinforced with 12 cords/m in either direction (longitudinal and transverse) in the compression zone, and with 24 cords/m in either direction in tension zone. For both panels the cords were inserted at a depth of 40

mm. The first panel (dimensions: 50x268x100 cm) was placed on a horizontal plane, being supported at both its ends. The vertical load was applied by means of the four-point bending loading arrangement, over a span of 208 cm with the loads spaced 38 cm apart. The supports were two wooden elements with a square section of 24 cm, whereas for the loading devices were squared timber with a section of 10 cm. The panel was loaded by its own weight (density 2200 kg/m^3) as well as by the application of vertical load increments of 1.5 kN, distributed among the two loading devices. The panel reached a critical stage with an added vertical load of about 6 kN. This loading condition corresponds to a maximum bending moment equal to 2.55 kNm, which is added to a bending moment value equal to 5.95 kNm due to the panel's own weight (Figs. 7-8). During the third load step (4.5 kN) the first cracks parallel to the supports opened in the tension zone; these cracks widened progressively up to the 6 kN load, when, due to the large deformation of the intrados, some stones contained inside the mesh of the Reticulatus fell by gravity.

The second panel (dimensions 40x180x198 cm) was also subjected to a four-point bending loading arrangement. The panel was tested over a span of 124 cm (along the 180 cm side), and the load was applied by means of two H metal beams spaced 35 cm apart. The panel did not reach the failure point, even though a load of about 20 kN was applied (maximum bending moment 7.53 kNm), corresponding to an equivalent uniform load (inclusive of its own weight) of 41 kN/m. The two experimental tests described above gave significant results, considering that the panels were tested by placing them horizontally and subjecting them to bending, a very difficult situation for a stonework wall.

New tests

A second series of tests on wall panels assembled in laboratory was recently performed with different wall proportions. The testing program, consisting of 13 large-scale square specimens, was designed to evaluate the contribution of the Reticulatus reinforcement with a limited number of test variables compared to on-site testing. Each test is again referred by a multi-letter code: the letter designations MC or MP are used for pebble and barely cut stone-masonry panels, respectively (Fig. 9). UR or R letter designations are deployed to identify un-reinforced and retrofitted panels, respectively, and B, C or D the cord type used to retrofit the panels.

All wall specimens were 1150 x 1150 mm and wall's thickness was 39-40 cm. The shear strength is again provided by the diagonal compression strut mechanism, but the thickness of the new panels is smaller compared to the one of the first series of tests. Two distinct stone textural typologies were adopted, namely, barely cut stone masonry walls and rubble (pebble) stone masonry. For both typologies, weak lime-based mortar and heavy calcareous stones (weight density > 1800 kg/m^3) were used. All panels were constituted by two masonry leaves with no transversal connections (double-leaf walls).

Three kinds of cord have been used as reinforcement: types B, C and D (Tab. 2). Type B is constituted by stainless AISI 316 steel and types C and D by PBO fiber. The steel cord (type B) is made by twisting 49 0.03mm-diameter filaments together. The overall cord diameter and failure tensile load are 3 mm and 6.11 kN, respectively. PBO is a rigid-rod isotropic crystal polymer and it may have superior tensile strength and modulus to Aramid or Glass fibres.

For the construction of the wall panels only lime-based mortars have been selected (Tab. 5). Because peddle stone masonry usually presents very low mechanical properties, a weak lime mortar was used: the 60-day compressive strength of mortar, derived from six 100 mm diameter cylindrical sample (height = 200 mm), was 0.96 MPa for MC panels. This value is consistent with the typical compressive strengths of lime-based mortars found on-site in pebble stonemasonry constructions (Binda et al. 1997). A binder-rich mortar was used for MP wall panels (compressive strength = 1.87- 5.13 MPa), based on the fact that barley-cut stones where used in conjunction with better-quality mortars.

Eight though steel connectors were transversally inserted into both MC and MP panels according to the arrangement shown in Figure 10. Also for the repointing of the joints, lime based mortar has been used. Repointing mortar used for MC panels is characterized by a 60-day compressive strength of 8.90 MPa (CoV 14%). A better- quality repointing mortar has been selected for MP panels (compressive strength = 12.14 MPa) (Tab. 1). ASTM C780 standard (2008) was used as a reference for compression tests. The results of shear tests carried out on the wall panels are summarized in Table 6. This table also shows the results in terms of shear and tensile strength and tangent (shear) modulus computed in the [10-40%] stress range.

Control specimens both from MP and MC series were tested to evaluate the shear strength of the masonry material before the application of the reinforcement. Un-strengthened MP panels exhibited a shear strength much higher compared to un-strengthened panels tested on-site. The shear strength was 0.109 MPa (CoV 22.9%), compared to a shear strength of 0.024 MPa (CoV 33.3%) measured on-site. This was produced by the use of a non-degraded lime-based mortar with better mechanical properties compared to the one of panels tested on-site. For reinforced panels, it is noteworthy to mention the different cord type and wall thickness between on-site and laboratory panels. However the emerging line of research suggests that the better overall mechanical properties of un-strengthened panels tested in laboratory had as consequence a reduced effectiveness of the reinforcement with the Reticulatus technique.

Considering that the reinforcement ratio was 0.0072-73 compared to 0.0012-18 on-site , the MP panels (MP-3-R-N and MP-4-R-N) reinforced with steel cords (Type B) exhibited an increment of shear strength of only 16.5% (Figs. 11-12). For un-reinforced pebble (MC) panels the use for construction of a weaker mortar and the presence of rounded stones caused a significant decrement of the lateral capacity (0.0355 MPa) with a reduction of approx. 67% compared to the shear strength of unreinforced MP panels. However similarly to on-site testing, the effectiveness of the Reticulatus

techniques was higher for MC panels: the application of the cord-reinforcement into the mortar joints caused an increase of the panel lateral capacity of 41%. The shear stress versus angular strain response is shown in Figure 13 for panels reinforced with Type B steel cords. From these results, a significant conclusion can be drawn: strengthening by means of Reticulatus technique is more effective when the quality of the masonry (and in particular of the pre-existing mortar) is low.

By the use of PBO cords (Types C and D), it was possible to increase the effectiveness of the reinforcement. An overall increment of 49% was measured for PBO-reinforced panels compared to the average strength value of the 4 un-strengthened MP panels. The application of the cord-reinforcement has the main role to absorb tensile stresses and the presence of non-pulverulent mortar is a limit of the effectiveness of the reinforcement as the mortar is also able to absorb the tensile stresses. Figure 14 shows stress responses of all tests for panels reinforced with PBO fibers. The graphs show a significant increase in lateral capacity with negligible increases of shear modulus defined by the slope of the linear regression curve in the initial elastic phase.

For unreinforced panels (MP and MC), experimental observations demonstrate that the dominant failure mode is associated with diagonal cracking in the mortar joints. Again, the diagonal compression load did not cause failures in the stones. The tests on panels reinforced with Reticulatus showed that, by holding together the various parts making up the sample, this strengthening technique is able to overcome this problem. Cords have substantially high resistance to tensile stresses and this contributes to the shear resisting mechanism of the wall panels.

From these results, the following clear tendency can be seen. Strengthening by means of Reticulatus technique does not result in a significant increase in the shear elastic modulus. For some panels the elastic shear modulus increase was negligible or even a shear modulus decrease was observed. The presence of the cords neither modifies the deformation behavior of the structure nor causes major redistribution of stiffness; it mainly results in a noticeable increase of the masonry shear strength and deformation capacity.

DESIGN APPROACH

Failure of strengthened masonry section under compression and bending

The conventional analytical approach outlined in the Italian code (2008) was used to compute the ultimate capacity of the masonry panels strengthened using the Reticulatus technique.

The capacity of reinforced masonry sections under a compressive axial force (N) and a bending moment (M), in both in- and out-of-plane directions, can be determined based on the following assumptions:

- plane cross-sections remain plane;

- rectangular stress block for masonry in compression, with an equivalent depth of 0.8 times the neutral axis depth (Fig. 15a);
- linear relationship between stress and strain for the reinforcement loaded in uniaxial tension (Fig. 15b).

Let b denote the width and f_{md} the compressive strength of the masonry material. According to the following condition of equilibrium:

$$0.85 f_{md} \cdot 0.8x \cdot b - \sum E_f \cdot A_{f,i} \cdot \varepsilon_{f,i} - N = 0 \tag{5}$$

the neutral axis depth (x) is given by:

$$x = \frac{\sum E_f \cdot A_{f,i} \cdot \varepsilon_{f,i} + N}{0.85 f_{md} \cdot 0.8 \cdot b} \tag{6}$$

where E_f is the cord Young's modulus, $A_{f,i}$ is the area of the *i-cord* below the neutral axis (this is the area of the reinforcement contributing to the equilibrium); $\varepsilon_{f,i,}$ and N are the strain of the *i-cord* below the neutral axis and the axial force, respectively.

Once the neutral axis position is known, it is possible to compute the moment capacity (M_{Rd}) :

$$M_{Rd} = B_{Rc} \cdot \left(0.85 f_{md} \cdot 0.8x \cdot b\right) + B_{Rt} \cdot \left(\sum E_f \cdot A_{f,i} \cdot \varepsilon_{f,i}\right) \tag{7}$$

where B_{Rc} and B_{Rt} are the lever arms of the resultant (R_c) of the compressive stresses is the arm of the resultant (R_t) of the tensile stresses, respectively.

For the bending moment produced by out-of-plane forces, it is worth noting that all the steel cords contribute to the tensile strength as shown in Figure 16. For in-plane bending, the cords behave differently depending on their position. This contribution can be calculated by assuming the resisting cord area concentrated at the centre of mass of the cords in tension (Fig. 17).

Failure of strengthened masonry section under shear

Using the approach for design of masonry walls reinforced by RC (Reinforced Concrete) jacketing (Italian Building Code 2008), the authors evaluated the reinforcement shear contribution using a simple truss mechanism where a masonry strut carries compressive stresses and the grid layout withstand tensile stresses.

The nominal shear capacity of the strengthened walls (V_{Rd}), is given by the addition of the masonry ($V_{Rd,m}$) and cord reinforcement ($V_{Rd,f}$) contributions.

$$V_{Rd} = V_{Rd,m} + V_{\mathrm{R}d,\mathrm{f}} = d \cdot t \cdot f_{vd} + \frac{1}{\gamma_{Rd}} \cdot 0.6 \cdot d \cdot \frac{A_{sw} f_{yd}}{s} \tag{8}$$

where: d is the distance between the compression side of the masonry and the centroid of the flexural strengthening, t is the masonry panel thickness, f_{vd} is the design shear strength of the masonry, γ_{Rd} is the partial factor to be assumed equal to 1.20, A_{sw} is the area of the reinforcement, f_{yd} is the design strength of the reinforcement, s is the center-to-center spacing of reinforcement measured orthogonally to the direction of the shear force.

Table 7 reports the experimental results (V_{exp}) and the corresponding theoretical predictions (V_{Rd}) obtained using eq. (8). The proposed approach has led to an acceptable difference between analytical and experimental results. The error of the model varied from 15% (lab testing) to 25% (on-site testing). Experimental results were bigger than numerical ones for on-site tests, whereas numerical simulations gave an overestimation of the shear capacity for specimens tested in laboratory. However, since there are no technical recommendations or standards for this reinforcement method, the above mentioned formulas seem to be adequate for design purposes, demonstrating how the same approach used for RC jacketing can be satisfactory used here.

CONCLUSIONS

In this paper the effect of cord reinforcement has been investigated. The Reticulatus system may be applied separately or in combination with other techniques and can be applied on both regular and irregular masonry, with limited visual impact. The reinforcement is particularly suitable for fair-faced masonry. The paper also describes in detail the reinforcement procedures successfully applied in the experimental investigations.

Four different cord types have been used to strengthen the wall panels. The large number of diagonal compression tests performed on-site and in the laboratory on full-scale wall rough-hewn stone and river pebble masonry panels have shown that the technique produced substantial increases in shear strength.

All wall panels have been strengthened on both faces. For panels retrofitted on-site the effect of the reinforcement was higher because of the low quality of the pre-existing mortar: reinforced panels exhibited an increase in shear strength up to 170%, compared to unreinforced reference panels.

For panels tested in laboratory, the reinforcement produced an increase in shear strength of 17% for stone masonry and 40% for pebble masonry. Thus it is clear that the increase in strength also depends on the mechanical characteristics of the masonry being reinforced, becoming more noticeable for low quality masonry, as in the case of pebble masonry.

The effect of the reinforcement on the shear modulus is limited. Because the cords starts contributing to lateral panel's capacity when the masonry begins to crack and to deform, the initial shear modulus is not significantly affected. Test results demonstrated that the increase in shear modulus is mainly governed by the mechanical characteristics of the new repointing mortar.

Experimental results were in good agreement with predictions from web plate numerical models. These models neglected the contribution of the repointing mortar, but accounted the non-linear behavior of the masonry. The models may represent a useful design tool and can be considered as a point of departure for more in-depth analyses.

ACKNOWLEDGMENTS

This project was sponsored by the Italian Ministry of Education and Research [MIUR - ReLUIS (2010-2013)]. Special thanks are directed to Mr. Alessio Molinari and Mr. Simone Tralascia. The authors would like to acknowledge Fibre Net S.r.l for financial support and material supply.

REFERENCES

Almeida JA, Pereira EB, Barros JA (2015) Assessment of overlay masonry strengthening system under in-plane monotonic and cyclic loading using the diagonal tensile test. Constr Build Mater, 94, 851-865.

Ashraf M, Khan AN, Naseer A, Ali Q, Alam B (2012) Seismic behavior of unreinforced and confined brick masonry walls before and after ferrocement overlay retrofitting. International Journal of Architectural Heritage; 6:665–88.

ASTM C780 (2008), Standard Test Method for Preconstruction and Construction Evaluation of Mortars for Plain and Reinforced Unit Masonry.

ASTM E519 (2002) Standard Test Method for Diagonal Tension (Shear) in Masonry Assemblages.

Babaeidarabad S, De Caso F, Nanni A (2013) URM walls strengthened with fabric-reinforced cementitious matrix composite subjected to diagonal compression. J Compos Constr;18(2): 04013045.

Binda L, Modena C, Baronio G, Abbaneo S (1997) Repair and investigation Techniques for stone Masonry walls. Constr Build Mater; 11(3):133-142.

Borri A, Castori G, Corradi M (2014) Determination of shear strength of masonry panels through different tests. International Journal of Architectural Heritage

Borri A, Castori G, Corradi M, Sisti R (2014) Shear strengthening of wall panels through jacketing with cement mortar reinforced by GFRP grids. Compos Part B-Eng; 64:33-42.

Borri A, Castori G, Corradi M, Speranzini E (2015) Durability analysis for FRP and SRG composites in civil applications. Key Engineering Materials; 624:421-428.

Borri A, Corradi M, Giannantoni A, Speranzini E (2008) Consolidation and reinforcement of stone walls using a reinforced repointing grid, Proceeding of the 6th International Conference on Structural Analysis of Historical Constructions, July 2-4, 2008, Bath, UK.

Borri A, Corradi M, Giannantoni A, Speranzini E (2010) Reinforcement of historic masonry with high strength steel cords, Masonry International, 23(3): 79-90..

Carozzi FG, Poggi C (2015) Mechanical properties and debonding strength of Fabric Reinforced Cementitious Matrix (FRCM) systems for masonry strengthening. Compos Part B-Eng, 70, 215-230.

Corradi M, Borri A, Vignoli A (2002) Strengthening techniques tested on masonry structures struck by the Umbria–Marche earthquake of 1997–1998. Constr Build Mater; 16(4):229–239.

Corradi M, Borri A, Vignoli A (2008) Experimental evaluation of the in-plane shear behaviour of masonry walls retrofitted using conventional and innovative methods. J of the British Masonry Soc; 21(1):29-42.

Corradi M, Tedeschi C, Binda L, Borri A (2008) Experimental evaluation of shear and compression strength of masonry wall before and after reinforcement: deep repointing. Construction and building materials, 22(4):463-472.

De Felice G, De Santis S, Garmendia L, Ghiassi B, Larrinaga P, Lourenço PB, Oliveira DV, Paolacci F, Papanicolaou CG (2014) Mortar-based systems for externally bonded strengthening of masonry. Mater Struct; 47(12): 2021-2037.

Diz S, Costa A, Costa AA (2015) Efficiency of strengthening techniques assessed for existing masonry buildings. Eng Struct, 101:205-215.

Ehsani M R, Saadatmanesh H, Velazquez-Dimas J I (1999) Behavior of retrofitted URM walls under simulated earthquake loading. J Compos Constr, 3(3): 134-142.

ElGawady M, Lestuzzi P, Badoux M (2005) In-plane response of URM walls upgraded with FRP. J Compos Constr; 9(6):524–35.

EN 1015-11:1999/A1 (2006) Methods of test for mortar for masonry - Part 11: Determination of flexural and compressive strength of hardened mortar.

Gabor A, Bennani A, Jacquelin E, Lebon F (2006). Modelling approaches of the in-plane shear behaviour of unreinforced and FRP strengthened masonry panels. Composite structures, 74(3): 277-288.

Gattesco N, Amadio C, Bedon C (2015) Experimental and numerical study on the shear behavior of stone masonry walls strengthened with GFRP reinforced mortar coating and steel-cord reinforced repointing. Eng Struct, 90:143-157.

Gregorczyk P, Lourenço P B (2000) A review on flat-jack testing. Engenharia Civil UM; 9:39-50.

Italian Building Code (2008), Italian Ministry of Infrastructures. Nuove norme tecniche per le costruzioni e relative istruzioni. D.M. 14-01-2008 / Circolare 02-02-2009, n. 617/C.S.LL.PP. (in italian).

Luciano R, Sacco E (1998) Damage of masonry panels reinforced by FRP sheets. International Journal of Solids and Structures, 35(15):1723-1741.

Maheri MR, Najafgholipour MA, Rajabi A R (2011) The influence of mortar head joints on the in-plane and out-of-plane seismic strength of brick masonry walls. IJST, Trans. Civil and Environmental Engineering, 35:63-79.

Milani G (2009) Homogenized limit analysis of FRP-reinforced masonry walls out-of-plane loaded. Computational Mechanics, 43(5):617-639.

Modena C (1994) Repair and upgrading techniques of unreinforced masonry structures utilized after the Friuli and Campania-Basilicata earthquake. Earthquake Spectra; 10(1):171-185.

Papanicolaou CG, Triantafillou TC, Papathanasiou M, Karlos K (2008) Textile reinforced mortar (TRM) versus (FRP as strengthening material of URM walls:out of plane cyclic loading, Mater Struct; 41(1):143-157.

Prota A, Marcari G, Fabbrocino G, Manfredi G, Aldea C (2006) Experimental in-plane behavior of tuff masonry strengthened with cementitious matrix–grid composites. J Compos Constr; 10(3):223-233.

Razavizadeh A, Ghiassi B, Oliveira DV (2014) Bond behavior of SRG-strengthened masonry units: Testing and numerical modeling. Constr Build Mater, 64:387-397.

RILEM TC., (1994) 76-LUM. Diagonal tensile strength tests of small wall specimens, 1991. In RILEM, Recommendations for the Testing and Use of Constructions Materials. London: E& FN SPON, 488–489.

Speranzini E, Borri A, Castori G, Corradi M (2011) Shear behavior of unreinforced and reinforced masonry panels subjected to in-situ diagonal compression tests, Constr Build Mater, 25(12): 4403–4414.

Stratford T, Pascale G, Manfroni O, Bonfiglioli B (2004) Shear strengthening masonry panels with sheet glass-fiber reinforced polymer. J Compos Constr; 8(5), 434–443.

Triantafillou TC (1998) Strengthening of masonry laminates using epoxi-bonded FRP laminates. J Compos Constr; 2(2):96–104.

Valluzzi MR, Tinazzi D, Modena C (2002) Shear behavior of masonry panels strengthened by FRP laminates. Constr Build Mater; 16(7):409–416.

Velazquez-Dimas JI, Ehsani MR (2000) Modeling out-of-plane behavior of URM walls retrofitted with fiber composites. J Compos Constr, 4(4):172-181.

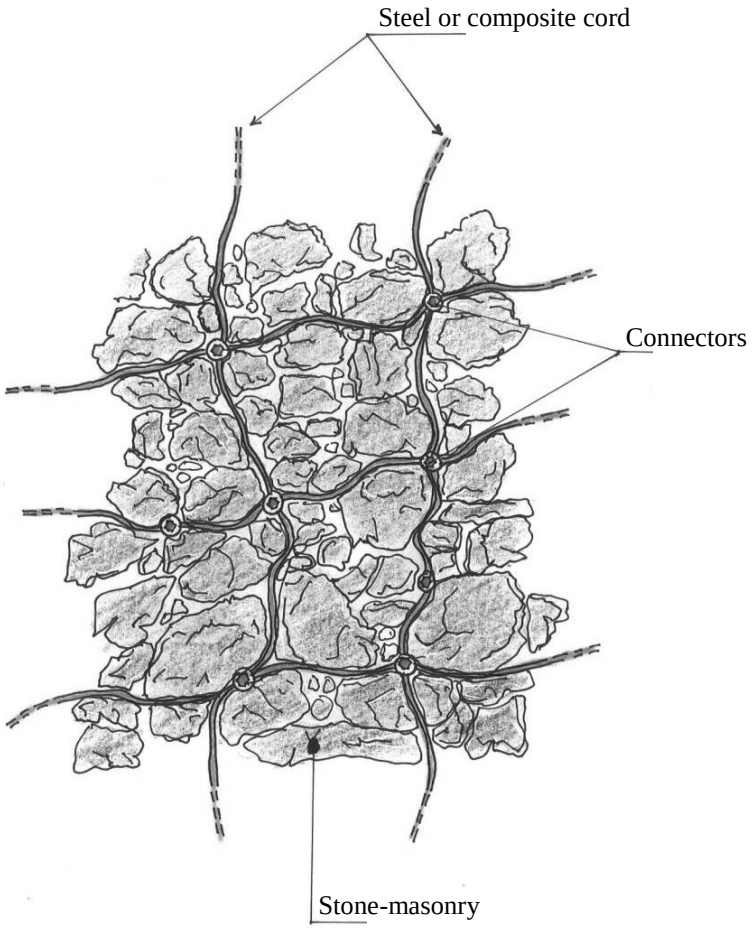

Figure 1. The Reticulatus technique: reinforcement layout.

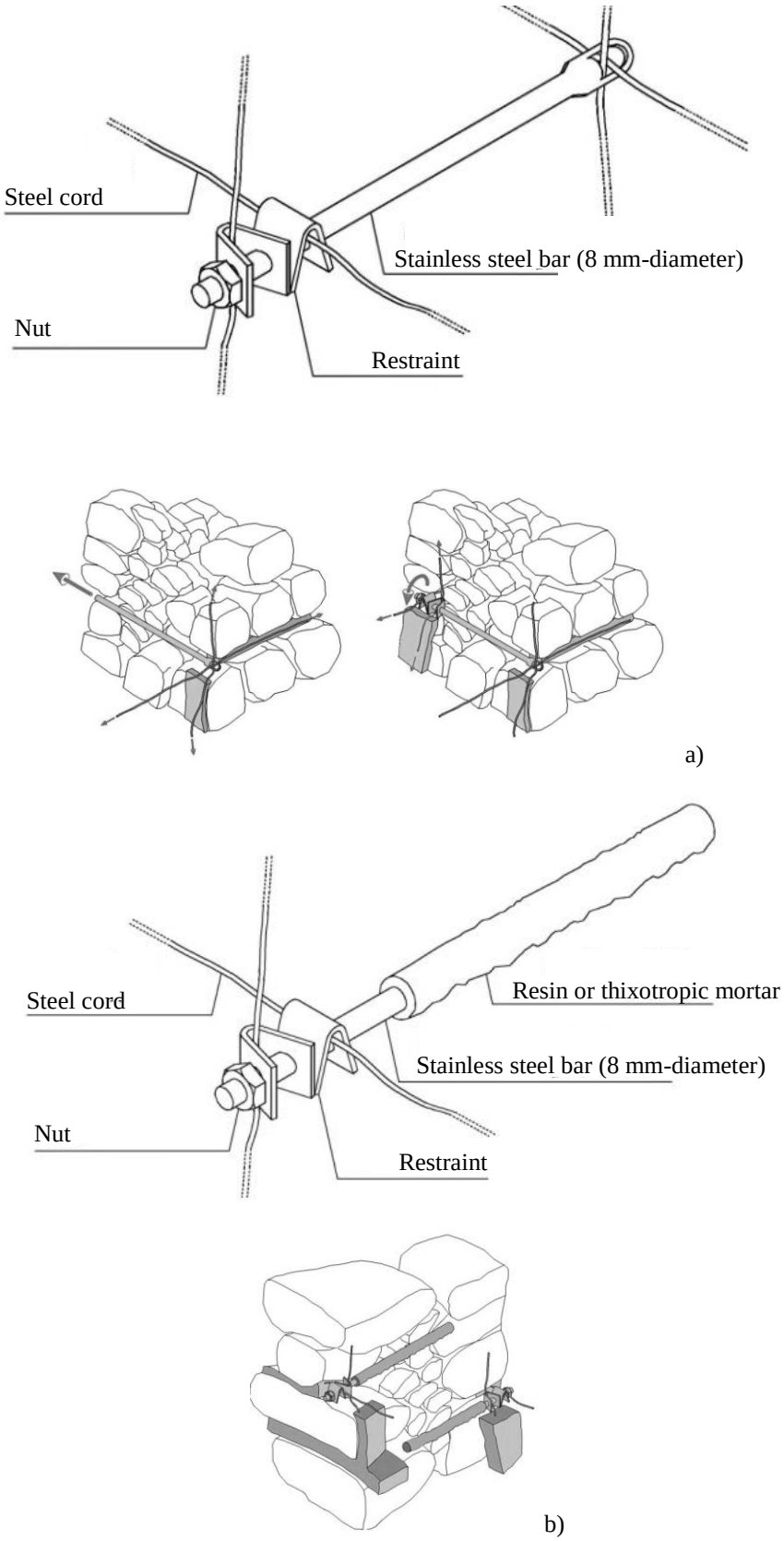

Figure 2. Strengthening of the walls: a) detail of a through connector;

b) detail of a not-through connector.

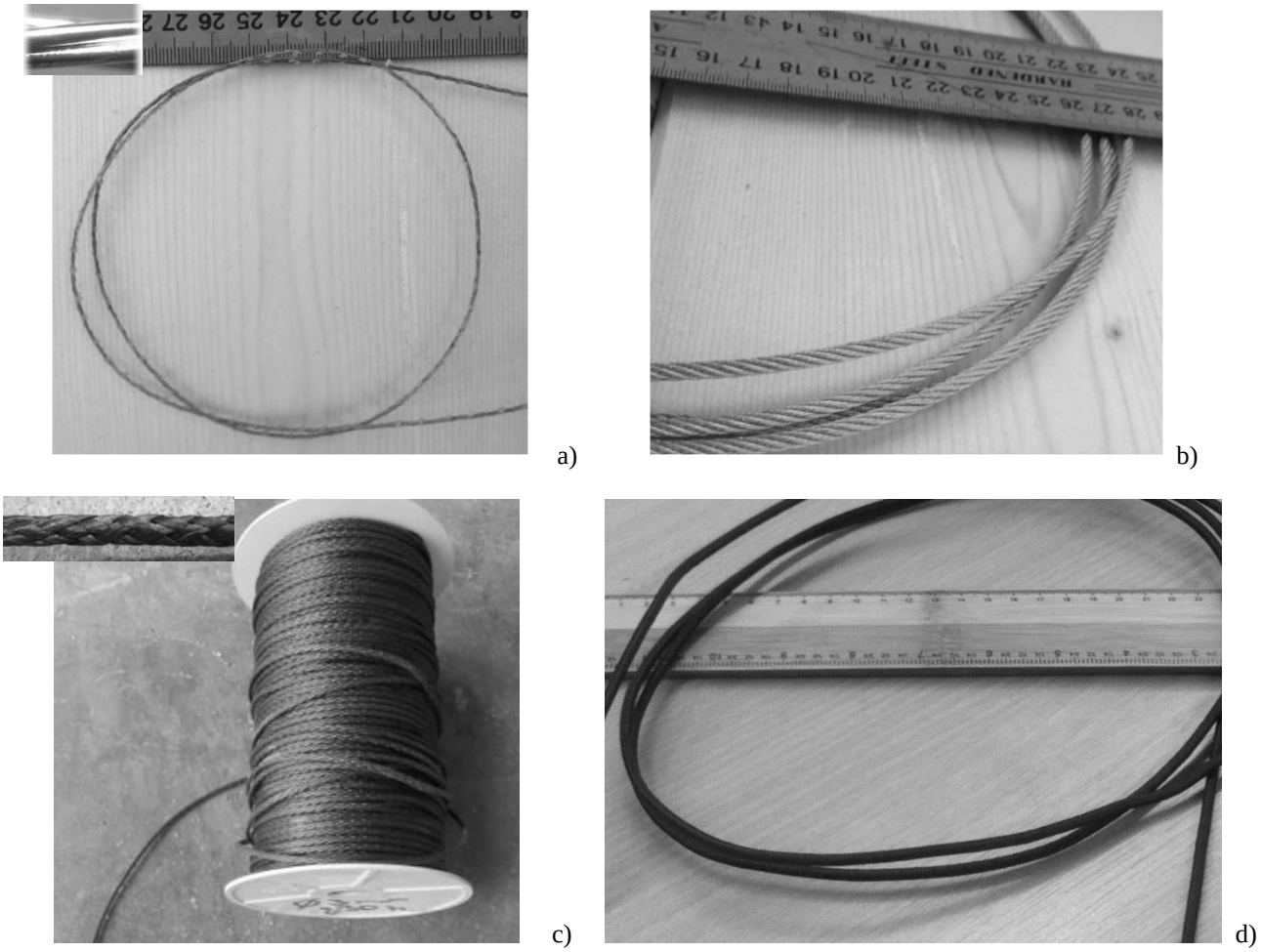

Figure 3. The cords used to reinforce the panels: a) Type A, b) Type B, c) Type C, d) Type D.

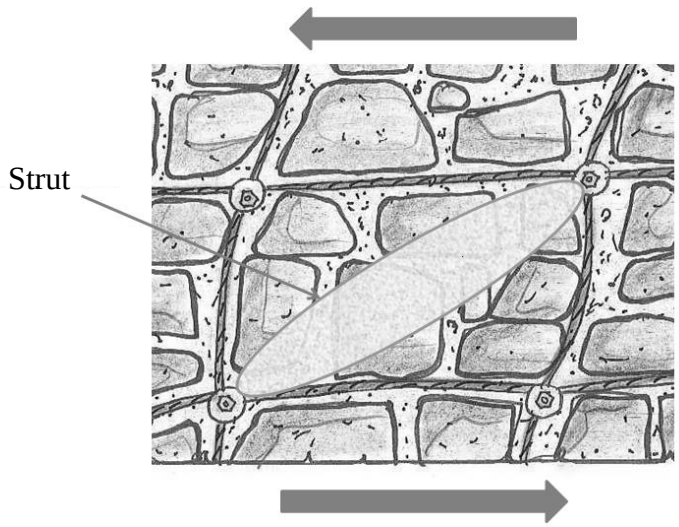

Figure 4. Strut-and-tie model for a reinforced portion of a wall subjected to an in-plane load.

(a) (b)

Figure 5: On-site testing on reinforced samples: a) flat jack testing, b) diagonal compression test.

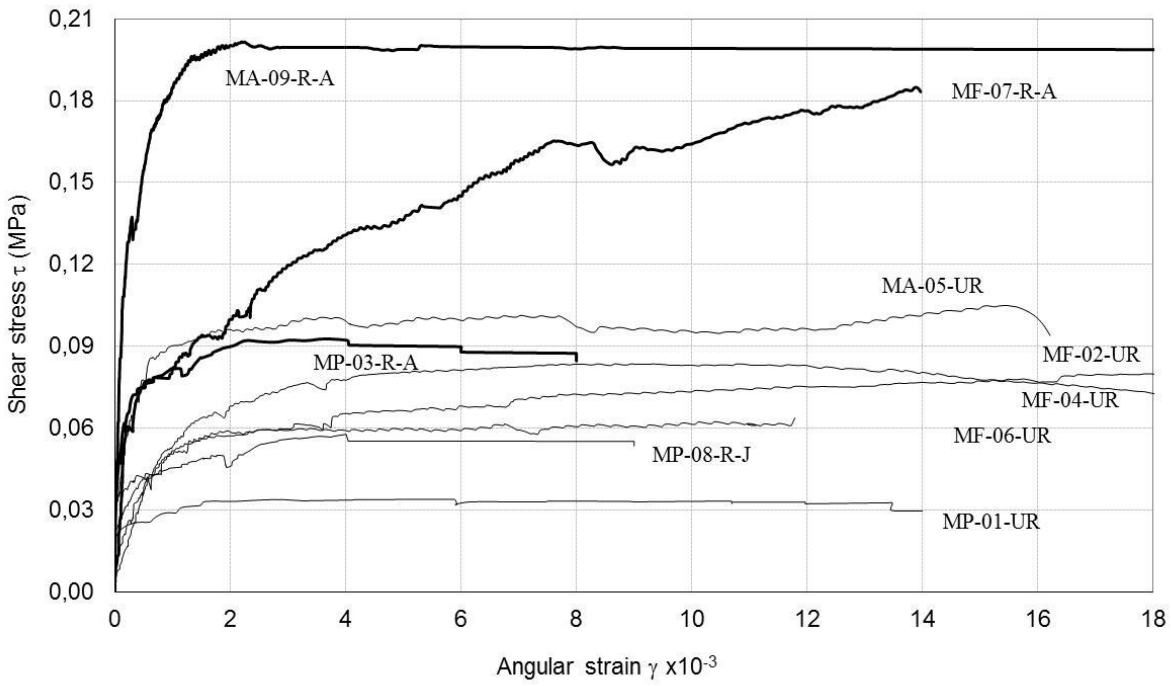

Figure 6. On-site shear tests: load/angular strain responses.

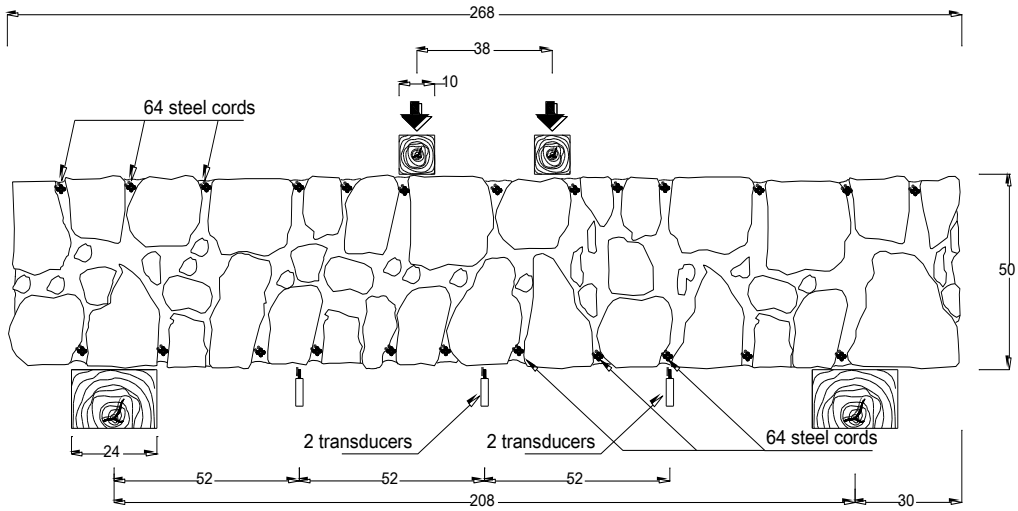

Figure 7. On-site bending tests: test arrangement (dimensions in (cm)).

Figure 8. Out-of-plane test.

a)

b)

Figure 9. Unreinforced panels: a) stone masonry (MP), b) pebble panel (MC).

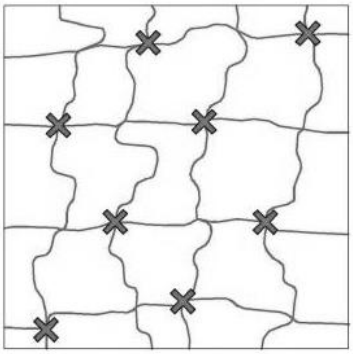

Figure 10. Arrangement of the though connectors.

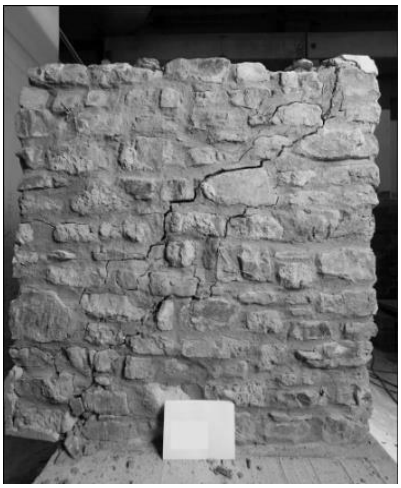

Figure 11. Failure mode of a reinforced stone panel (MP).

Figure 12. Failure mode of pebble stone panel (MC).

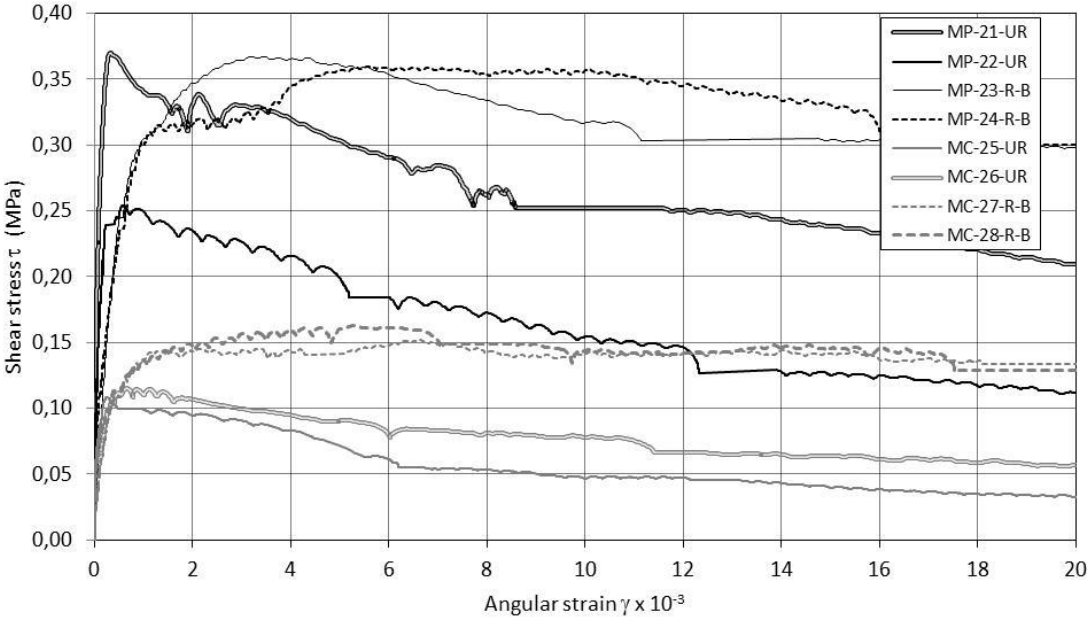

Figure 13. Laboratory shear tests: load/angular strain responses.

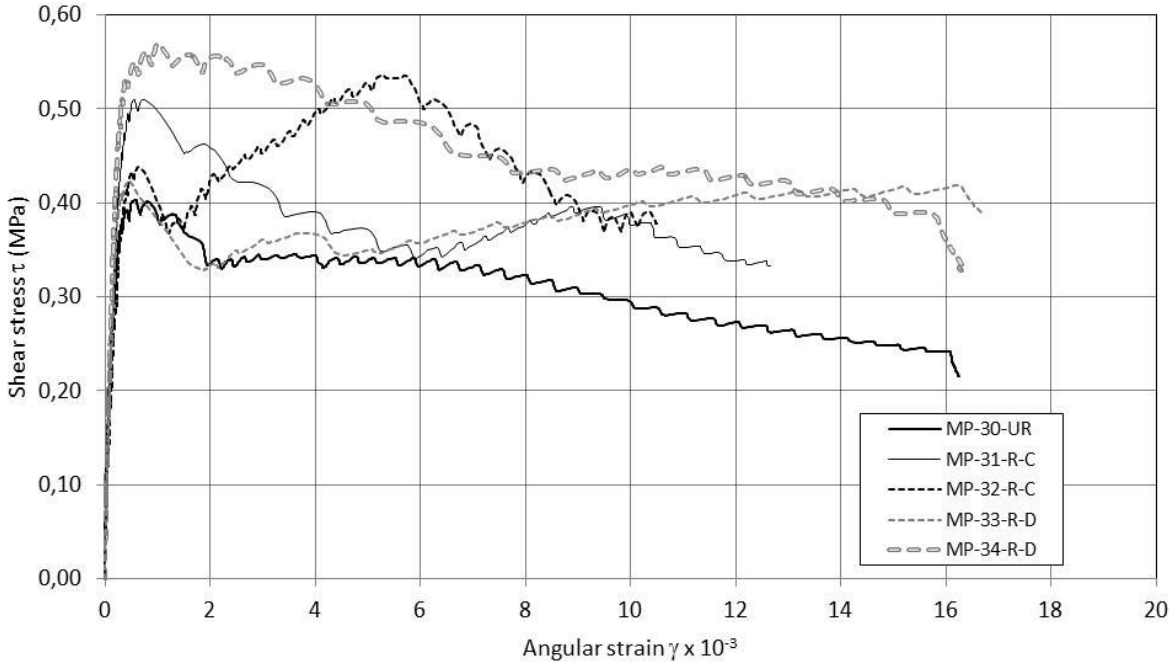

Figure 14. Laboratory shear tests: load/angular strain responses.

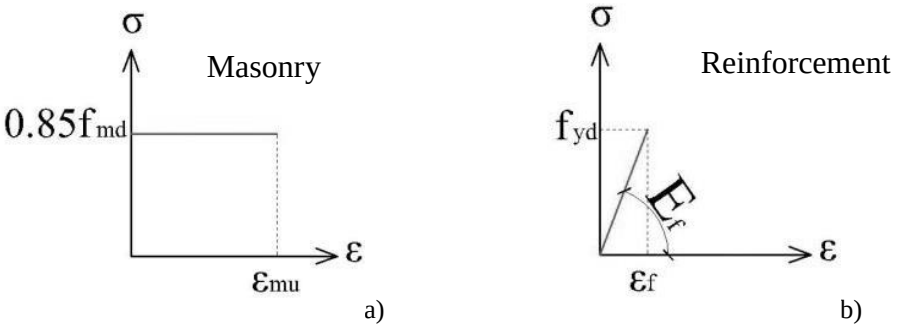

Figure15. Constitutive laws: a) masonry; b) reinforcement.

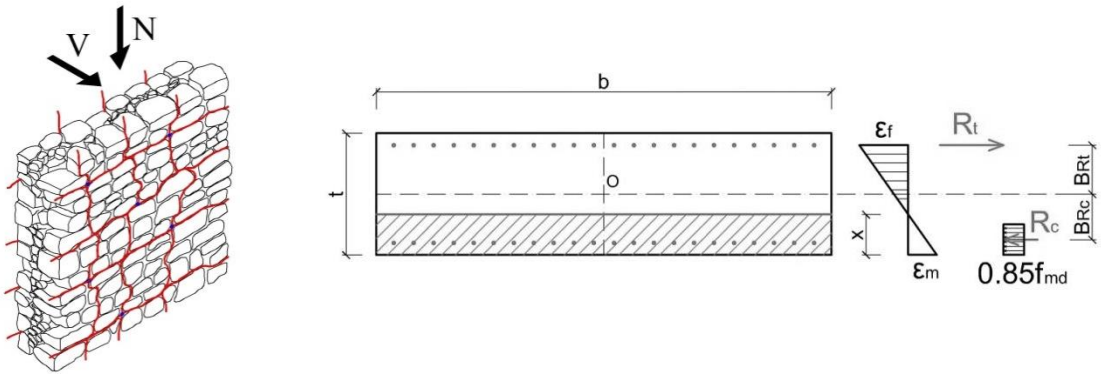

Figure 16. Stress – strain distribution into reinforced section (under compression and bending): out-of-plane behavior.

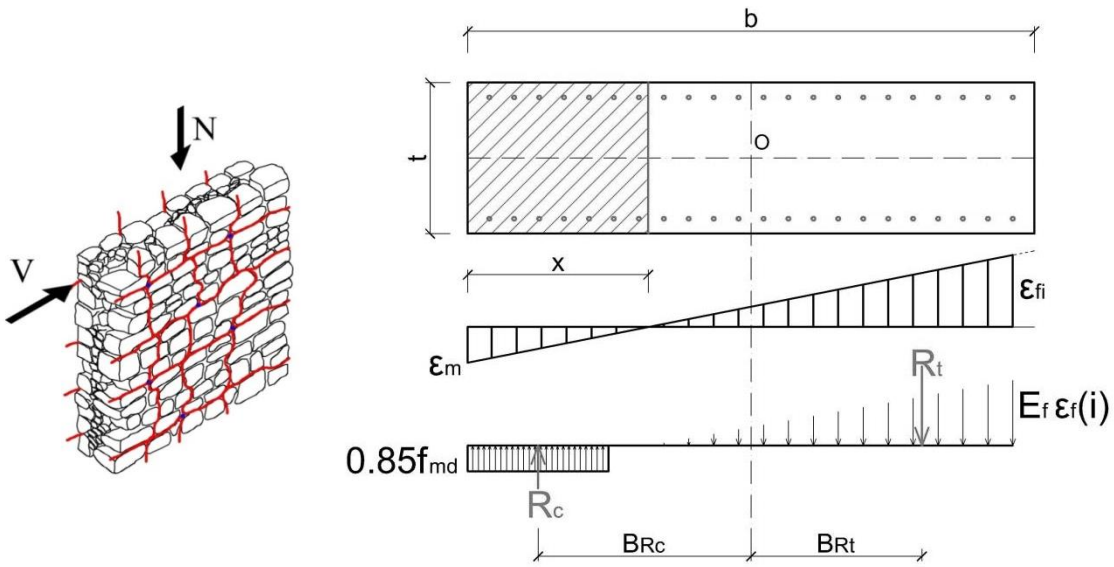

Figure 17. Stress – strain distribution into reinforced section (under compression and bending): in-plane behavior.

Table 1. Properties of repoiting mortars.

Mortar designation	Mortar 1*	Mortar 2**
Compressive strength (MPa)	8.90	12.14
Number of samples	4	3
Coefficient of Variation (CoV) (%)	14	3
Indirect tensile strength (MPa)	0.43	1.55
Number of samples	3	2
Coefficient of Variation (CoV) (%)	21	6
Young's modulus (MPa)	17560	21755

* used for joint repointing of panels No. 21-28

*** for panels No. 30-34

Table 2. Cord mechanical properties.

	Cord A	Cord B	Cord C	Cord D
Material	steel	steel	PBO	PBO
Filament diameter (mm)	0.35	0.33	-	-
Nominal diameter (mm)	0.889	3	3	5
Number of filaments per cord	5	49	-	-
Rope configuration	twisted	twisted	twisted	unidirectional
Net cross section area (mm^2)	0.481	4.19	3.36	4.21
Linear density (dtex)	-	-	52480	65600
Failure tensile load (N)	1539 (8.3)	6110 (11.3)	12009 (14.8)	11305 (13.9)
Young's modulus (GPa)	206	81.5	86440	249870
Tensile strength (MPa)	3070	1458	3570	2688
Elongation at failure (%)	2.1	1.96	-	-

(CoV) (%)

Table 3. Results of the compression tests with flat jacks.

Reinforcement	Test No.	Compressive strength (MPa)	Strength increment (%)	Young's Modulus $E_{1/3}$ (MPa)	Young's Modulus $E_{1/2}$ (MPa)
Un-reinforced	URM 01	0.595	-	480	354
Deep repointing	REP 02	0.807	36	393	342
Deep repointing	REP 03	0.857	44	512	452
Reinforced repointing	SRE 04	1.261	112	486	362
Reinforced repointing	SRE 05	1.312	121	2416	1862

Table 4. Results of diagonal compression tests (on-site testing).

Index	Panel thickness (cm)	Reinf. Ratio ρ_t * (%)	Max Load P_{max} (kN)	Tensile strength f_t (MPa)	Shear strength τ_0 (MPa)	$\tau_{0,R}/\tau_{0,NR}$	Shear modulus G (MPa)
MP-01-UR	52	-	19.31	0.0162	0.0108	-	444
MF-02-UR	70	-	68.06	0.0396	0.0264	-	67
MF-04-UR	62	-	63.71	0.0398	0.0265	-	63
MF-06-UR	67	-	51.77	0.0305	0.0203	-	233
MA-05-UR	68	-	81.34	0.0503	0.0335	-	169
MP-08-R-J	53	-	34.30	0.0276	0.0184	1.70	736
MP-03-R-A	52	0.0015÷18	52.28	0.0438	0.0292	2.70	618
MF-07-R-A	61	0.0013÷16	137.85	0.0878	0.0585	2.40	140
MA-09-R-A	62	0.0012÷15	148.14	0.0962	0.0641	1.91	776

* area fraction of steel cords (cord cross sectional area/A_n)

Table 5. Properties of mortars used for panel construction.

	Mortar 1*	Mortar 2**	Mortar 3***
Compressive strength (MPa)	1.87	0.96	5.13
Number of samples	14	9	15
Coefficient of Variation (CoV) (%)	21	33	29
Indirect tensile strength (MPa)	-	-	0.68
Number of samples	-	-	15
Coefficient of Variation (CoV) (%)	-	-	12
Young's modulus (MPa)	12640	7590	14854

* used for construction of panels No. 21, 22, 23 and 24 ** for panels No.25, 26, 27 and 28

*** for panels No. 30, 31, 32, 33 and 34

Table 6. Results of diagonal compression tests (lab testing).

Test No.	Panel thick. (cm)	Reinforcement Ratio ρ_t * (%)	Max Load P_{max} (kN)	Tensile strength f_t (MPa)	Shear strength τ_0 (MPa)	$\tau_{0,R}/\tau_{0,NR}$	Shear modulus G (MPa)
MP-21-UR	39.7	-	161.58	0.176	0.117	-	3123
MP-22-UR	38.7	-	107.03	0.121	0.081	-	2254
MP-23-R-B	40.1	0.0072	162.38	0.175	0.117	1.18	550
MP-24-R-B	39.7	0.0073	158.51	0.171	0.114	1.15	548
MC-25-UR	39.6	-	46.66	0.052	0.034	-	-
MC-26-UR	39.4	-	49.77	0.055	0.037	-	544
MC-27-R-B	39.4	0.0074	63.79	0.072	0.048	1.36	349
MC-28-R-B	39.5	0.0074	69.73	0.077	0.052	1.46	-
MP-30-UR	40.0	-	177.97	0.192	0.128	-	2425
MP-31-R-C	39.4	0.0044	221.69	0.243	0.162	1.27	1746
MP-32-R-C	38.9	0.0045	229.50	0.255	0.170	1.33	1364
MP-33-R-D	39.0	0.0056	183.47	0.204	0.136	1.06	2375
MP-34-R-D	39.1	0.0056	246.99	0.271	0.181	1.41	2247

* area fraction of cords (cord cross sectional area/A_n)

Table 7. Comparison between theoretical and experimental results.

Panels		V_{exp} (kN)	$V_{Rd,m}$ (kN)	$V_{Rd,f}$ (kN)	V_{Rd} (kN)	$\frac{V_{exp}}{V_{Rd}}$
MP-R-A	On-site testing	18.68	5.53	16.52	22.04	0.847
MF-R-A		45.50	15.18	21.73	36.91	1.233
MA-R-A		49.40	20.65	15.17	35.83	1.379
MP-R-B	Lab testing	53.53	34.41	21.65	56.06	0.955
MC-R-B		22.18	12.05	21.39	33.44	0.663
MP-R-C		75.16	48.29	35.32	83.61	0.899
MP-R-D		69.50	48.29	33.32	81.61	0.852