Northumbria Research Link

Citation: Alemany, Ruben, Perez Soler, Joaquin and Llorente, Roberto (2009) UMTS radio-over-fiber pico-cell interconnection employing uncooled DFB lasers for multi-mode fibre modulation bandwidth enhancement. In: Annual Meeting of the IEEE Lasers and Electro-Optics Society (LEOS) 2009, 4-8 October 2009, Belek-Antalya Turkey.

URL: http://dx.doi.org/10.1109/LEOS.2009.5343379 <http://dx.doi.org/10.1109/LEOS.2009.5343379>

This version was downloaded from Northumbria Research Link: https://nrl.northumbria.ac.uk/id/eprint/474/

Northumbria University has developed Northumbria Research Link (NRL) to enable users to access the University's research output. Copyright © and moral rights for items on NRL are retained by the individual author(s) and/or other copyright owners. Single copies of full items can be reproduced, displayed or performed, and given to third parties in any format or medium for personal research or study, educational, or not-for-profit purposes without prior permission or charge, provided the authors, title and full bibliographic details are given, as well as a hyperlink and/or URL to the original metadata page. The content must not be changed in any way. Full items must not be sold commercially in any format or medium without formal permission of the copyright holder. The full policy is available online: http://nrl.northumbria.ac.uk/policies.html

This document may differ from the final, published version of the research and has been made available online in accordance with publisher policies. To read and/or cite from the published version of the research, please visit the publisher's website (a subscription may be required.)

Northumbria University NEWCASTLE

University Library

UMTS radio-over-fiber pico-cell interconnection employing uncooled DFB lasers for multi-mode fibre modulation bandwidth enhancement

Rubén Alemany, Joaquín Pérez and Roberto Llorente

Abstract— This paper analyzes experimentally the use of distributed feedback lasers (DFB) in order to increase modulation bandwidth in multimode fibres, enabling 3 km bidirectional radio-over-multimode fibre UMTS transmission in a frequency-division duplexing (FDD) configuration.

***Index Terms*—Radio over Fiber, MMF, UMTS, DFB.**

I. INTRODUCTION

UMTS is a widely deployed wireless standard for cellular radio networks[1]. In order to reach the theoretical maximum UMTS bitrate per user, a cellular network with dense radio coverage is required. This dense coverage requires small radio-cells and high number of interconnected base stations (B-nodes). Radio-over-fiber (RoF) techniques are suitable for base station interconnections. The use of MMF in RoF implies easy handling and low-loss connections due to its large fiber core diameter[2]. UMTS RoMMF enables centralized UMTS pico-cell networks. Figure 1 shows a centralized installation of a single UMTS B-node which is connected to UMTS passive radio access units (RaU) connected by multimode fibre (MMF). This is a typical application scenario for indoor areas with heavy network usage such as large office building, factories, large sport events, airports, etc.

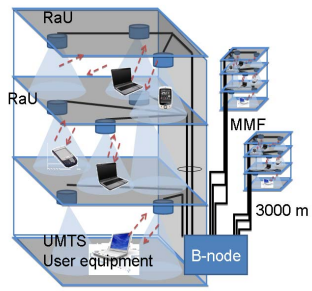

Fig. 1. Centralized UMTS B-node scenario.

In this paper the performance of a bidirectional radio over fibre UMTS transmission in a frequency-division duplexing (FDD) configuration is experimentally analyzed.

It is proposed an increase of MMF modulation bandwidth using narrow spectral linewidth optical sources, such as un-cooled DFB lasers, to transmit UMTS over standard OM1 MMF, mostly installed in-building scenarios[3], which enables further transmissions distances.

II. PRELIMINARY CHARACTERIZATION

First of all, in order to demonstrate the modulation bandwidth increase, the frequency response of the 62.5 µm diameter core OM1 standard MMF (Corning Infinicor 300) has been measured. This characterization has been done analyzing the frequency response of the overall system (optical source, MMF link and PIN-TIA receiver). Afterwards, the back to back frequency response of the optical system is subtracted obtaining the MMF transfer function. The transfer function of the MMF has been analyzed using two different optical sources: multimode 1310 nm vertical cavity surface emitting laser (VCSEL) from Raycan, and 1310 nm distributed feedback (DFB) laser from Mitsubishi. The receiver was a 7 GHz bandwidth multimode InGaAs PIN-TIA from Kyosemi.

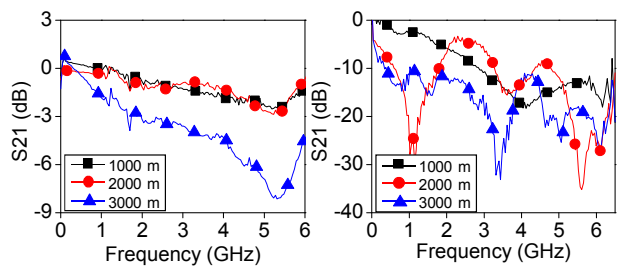

Fig. 2. MMF transfer function with DFB (left) and VCSEL (right) sources.

Figure 2 shows the MMF frequency response measured when modulating with the DFB and the MM VCSEL. It can be observed a 2 GHz -3 dB bandwidth for 1 km and 0.5 GHz

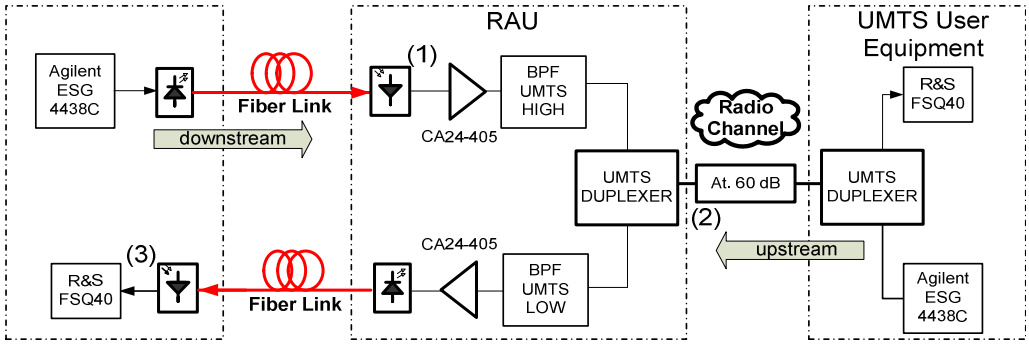

Fig. 3. Bidirectional RoMMF UMTS transmission setup.

for 3 km when modulating with the MM VCSEL source. On the other side, the modulation bandwidth obtained for the DFB case is 6 GHz for 1 km and 2 GHz for 3 km of 62.5 µm MMF. Although the bandwidth modulation at -3 dB over 3 km is 2 GHz, higher frequencies could be transmitted over this distance with higher attenuation.

III. Experimental set-up

Once the modulation bandwidth over different MMF lengths is known, the performance of radio-over-multimode fiber UMTS transmission in a frequency- division duplexing (FDD) is experimentally analyzed. The UMTS signals used in the experiment were centred at 2140 and 1950 MHz for the downlink and uplink respectively, following 16 QAM modulation, 3.84 Msymbol/s and 0.22 roll-off factor, achieving an overall bandwidth of 5 MHz. Figure 3 shows the experimental set-up implemented for the measurements.

The downlink signal is generated at the B-Node location using an electrical signal generator (Agilent ESG 4438C). This signal modulates directly the uncooled DFB laser, and the optical signal is transmitted over the 62.5 µm diameter core MMF link. At the RaU side, the optical signal is converted to electrical using a 7 GHz PIN-TIA receiver and amplified (Ciao Wireless CA24 40 dB gain). Afterwards, the signal is filtered with a band-pass filter (RtxTech 60 MHz bandwidth at 2140 MHz) and fed to an UMTS duplexer where the signal is finally analyzed using a vector signal analyzer (Rohde & Schwarz FSQ40) at the RaU antenna input (point 2 in figure 3). The uplink signal transmission is carried out in the opposite way but centred at 1950 MHz. For the uplink signal, the radio propagation is emulated by a 60 dB attenuator corresponding to 10 m free space link. This signal is analyzed at the B-node location (point 3 in figure 3).

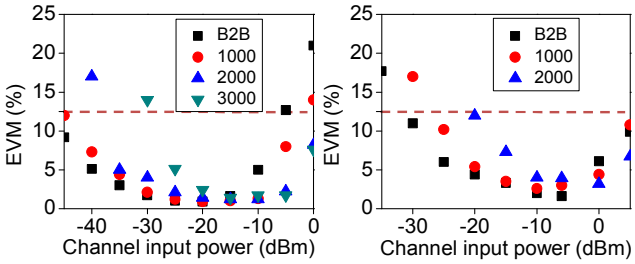

Fig. 4. UMTS optical transmission EVM performance for DFB (left) and VCSEL (right) sources.

In order to characterize the optical system performance, first downlink transmission of the UMTS downlink was measured after photodetection (point 1 in figure 3). Figure 4 shows the measurements of error vector magnitude (EVM) over different channel input powers and MMF lengths, comparing DFB and VCSEL performances. In both cases, the measurements remain quite below the limit imposed by the standard, 12.5 %, for a wide range of channel input powers. For the VCSEL optical system, 2 km transmission is feasible with 5 % EVM. However, DFB source allows 2 km transmission with 1.2% EVM and 3 km MMF transmission with 1.5% EVM due to the MMF modulation bandwidth increase. The uplink measurements are assumed to be similar due to the proximity with the downlink frequencies, as MMF transfer function shows at figure 3.

Once the performance of the optical system is proved, the bidirectional radio-over-fibre FDD UMTS transmission is analyzed. The channel input power for the downlink signal was -15 dBm at the B-node and 10.8 dBm at the antenna input (point 2 in figure 3) with an EVM of 1.84 %. The power of the uplink signal at the UMTS user equipment was 10 dBm and -32 dBm at the output of the B-node (point 3 in figure 2).

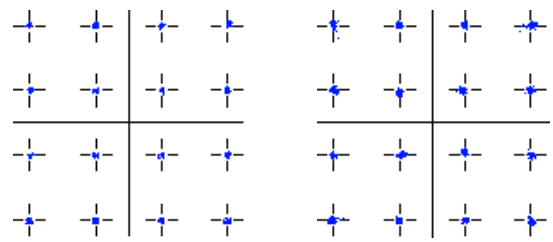

Fig. 5. EVM at point 2 in fig. 3 (left, EVM=1.84 %, Power=10.8 dBm, SNR=34.7 dB). EVM at point 1 in fig. 3 (right, EVM=3 %, Power=-32 dBm, SNR =30.5 dB).

IV. Conclusions

The results herein reported indicate that the use of un-cooled DFB lasers allows the modulation bandwidth increase on RoMMF. The performance obtained with the DFB enables 3 km UMTS communication on bidirectional RoMMF system with 1.5 % EVM. This bandwidth improvement could be used for systems operating at higher frequencies at a given MMF length.

V. Acknowledgments

Dr. Valentin Polo is acknowledged for his fruitful discussions and kind support. The support to the BONE "Building the Future Optical Network in Europe" Network of Excellence [4] funded by the European Commission is also acknowledged as well as to the Spanish MCyT SURF project (PET2005-0941).

References

[1] 3GPP TS 25104 V8.3.0 (2008-05), Technical Specification Group Radio Access Network (2008).
[2] L. A de Montmorillon, et al., "Latest advances in optical fibers", C.R Physique 9, pp. 1045-1054, 2008.
[3] A. Flatman, "In premises optical fiber installed base analysis to 2007", presented at the IEEE 802.3 10 GbE over FDDI Grade Fiber Study Group, Orlando (2004).
[4] ICT-BONE NoE, URL: http://www.ict-bone.eu.