A-State-Of-The-Art Review on Modular Building Connections

Heshachanaa Rajanayagam[1], Keerthan Poologanathan[1], Perampalam Gatheeshgar[1], George E. Varelis[2], Paul Sherlock[3], Brabha Nagaratnam[1], Phil Hackney[1].

[1]Faculty of Engineering and Environment, University of Northumbria, Newcastle upon Tyne, UK.
[2]Intecsea/Worley, Woking, UK.
[3]ESS Modular, Crag Ave, Clondalkin Industrial Estate, Dublin 22, Ireland.

Abstract

Modular Building System (MBS) is an emerging offsite construction technique, which uses prefabricated units, transported, and assembled onsite. In MBS construction process, designing stage is considered as the most significant stage. One of the critical concerns in designing MBSs is to maintain and to ensure the structural integrity of the assembly against critical loading conditions. Connections in the MBSs as a crucial part of the off-site construction, plays a prominent role in providing the essential performance and integrity for the assembled MBS. Hence, it is indispensable to analyse the existing connections used in industry and to investigate the benefits and limitations of their application in MBS construction. A thorough study on connection types will evaluate their capabilities in addressing functional requirements and will exhibit their potential to serve as a benchmark for a range of future modular construction techniques. Thus, this paper presents a review on various forms of inter-modular connection systems used in the contemporary construction industry. It covers the role of connections in the automation of assembly and disassembly of modular units; architectural, structural, and constructional challenges faced by the industry in using them; and their performance under different loading conditions. In addition, numerical studies performed on a selected intermodular connection model is also presented, investigating, and validating the mechanical behaviour of connection and justifying the applicability of such models in predicting connection behaviour. Finally, based on the review, suggestions to address modern construction obstacles by adding new information to the literature and then to overcome challenges in the wide adoption of the MBS in construction industry are presented. The outcome of this study assists in overcoming obstacles and encourages potential growth of MBS and/or off-site construction techniques in building construction industry.

Keywords:

Modular building, Modular Connection performance, Offsite constructions, Numerical studies.

1. Introduction

In recent years, prefabricated and factory-based building manufacture has attracted the interest of architects, engineers, and property developers. Prefabricated building construction increases the productivity of construction by handling the large proportion of traditional construction site work at production yards or factories and by minimising the on-site work to installation [1,2]. MBS implies an

integrated structure in which the whole frame or building contains prefabricated room-sized volumetric modules or structural units fabricated off-site and then built on-site [3]. MBS units are often fully equipped with the necessary infrastructure and transported to the building site, then assembled on-site to form complete residential or commercial structures [4]. Figure 1 shows a representation of typical MBS construction. Modular constructions are preferred options in buildings with identical standardised components, e.g. apartment complexes, educational institutions, hospitals, dorms, hotel rooms and offices [5–8].

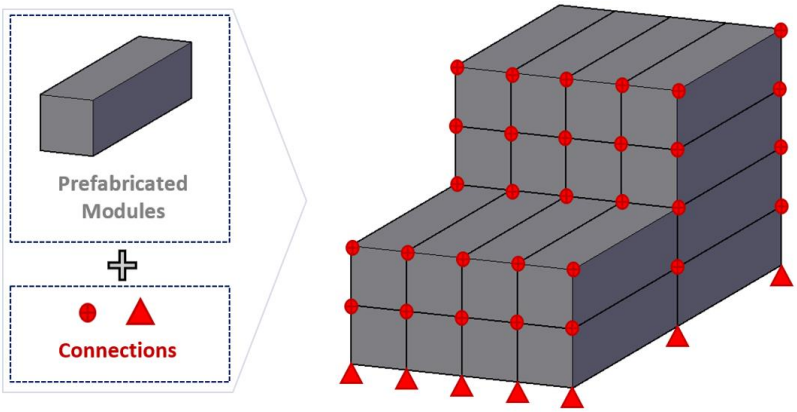

Figure 1: Modular building construction.

Currently, off-site modular construction has gained a growing interest in high-density urban areas, where building construction procedures are often challenged by limited workspace and high standards for minimum disruption during construction [3]. Also, MBSs are increasingly getting popular around the world, in recent years, due to their unique advantages which include reduced resource wastage and improved quality compared to traditional building constructions [8]. Britain is admired as a country, which continues to develop its capabilities as a pioneer in engineering and manufacturing. It houses one of the world's biggest engineering milestones; the tallest modular building on earth (Figure 2), which, is located in south London. The project was developed by Tide Constructions on behalf of Henderson Park and Greystar and recently saw the construction of the last 1,526 modules in Croydon to construct two 44-story and 38-story buildings [9,10].

Figure 2: Tide Construction work at 101 George Street in Croydon [10].

Design of high-rise MBSs is highly influenced by lateral load resistance in normal and critical loading conditions, structural integrity, the resistance, and compression capacity of structural elements related to vertical forces, and most importantly the load-transfer and deformation capacity of connections between structural elements and modules. Due to their effects on the distribution of internal forces and structural deformations, the behaviour of connections in the analysis and design of buildings should be considered exhaustively and can be defined based on strength, stiffness, and deformation capacity of their joint assembly. In contrast to in-situ built structures, MBSs have more connections and joints due to the need to connect individual structural elements to form module units, as well as modules to develop the entire structure. Many literature sources indicate that owing to the complexity of modular connections, the action of multiple storey MBSs under lateral loading is still not adequately understood [11,12]. Based on construction requirements of MBSs, an ideal modular connection should be easy to fabricate, manipulate and install, compact, tackle tolerance constraints, and preferably be demountable. There is limited research available related to the structural behaviour of existing MBS connection systems. Further studies are required to increase the understanding of structural behaviour and performance of currently used MBS connections [13]. This paper aims to provide a methodical study and comprehensive review on the modular building connections and their current progressions, structural behaviour, mechanical properties, challenges and imminent projections in the construction industry. The study also outlines the key output of numerical studies undertaken to analyse the mechanical behaviour of steel bracket connection [12], as a justification for the accurate prediction of connection slip behaviour by computer modelling.

2. Classification of Connection Systems

MBSs vary greatly with respect to the detailing specifications and design process, from conventional on site counterparts particularly when it comes to connection conception [5,14,15]. A standard form of conventional building structure typically has a single column that is connected to one or more beams through moment connections or joint connections [16]. In MBSs, on the other hand, the whole structure has several substructures, and each structural element has its own frame scheme. Many small beams and columns converge in the connecting point and this arrangement creates new challenges for structural design of MBSs. Each modular unit member of this structural system must be properly connected, in order to ensure the transmission of shear, bending moments, lateral load, and axial forces produced by external loads. Connections are therefore significant as they can affect the overall structural stability and robustness of MBSs [14]. MBS connections can be categorized into three groups: intra-modular, inter-modular, and module to foundation connections, as illustrated in Figure 3. Section 2.1, 2.2 and 2.3 provides more detailed description on each type of steel MBS connections.

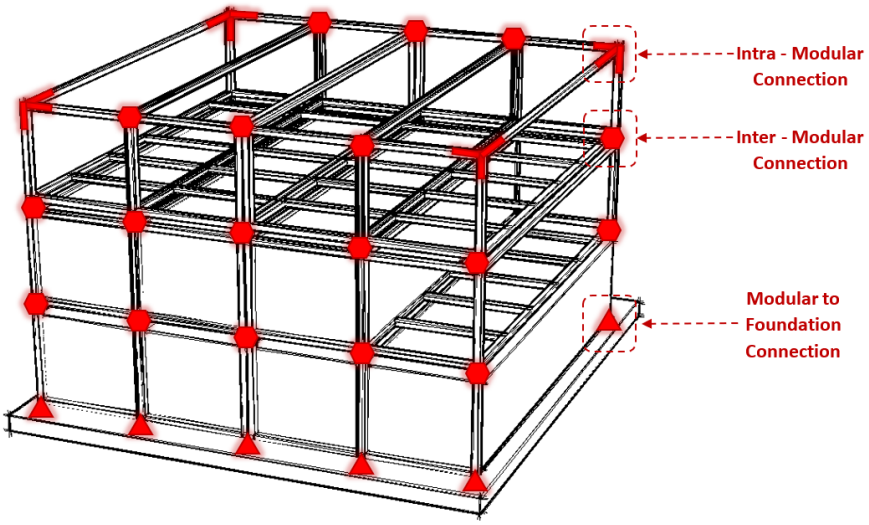

Figure 3: Types of modular building connections.

2.1.Inter-Modular Connection

Inter-modular connections entail horizontal connections in two plane directions from neighbouring modules and a vertical connection within stacked modules. In general, for on-site constructions, bolted connections are favoured over welded joints. A space between the floor and ceiling frames is generally provided, facilitating external access to inter-module connections and the provision of facilities between beams. Consequently, here the focus is on the connection between the columns rather than the beams. Inter-modular connections provide a path for load sharing and transmission between modular units and are the linking elements that allow stacked modules to pass loads effectively to the base. The inter-modular connections fulfil robustness requirements through load sharing, which avoids the catastrophic incremental collapse due to local failure. Furthermore, individual designs of frame members may demand lateral restraint created by a link between the modules. Inter-modular connections also meet the requirements of construction and serviceability. An inter-modular connection can for example, be used to bring modules together during site assembly to close the distance between them, thereby enabling individual modular units that are not perfectly straight or square to be used. Inter-modular connections restrict the differential movement between modules that can otherwise degrade the flashing or cause serviceability failure [8].

In general, the inter-modular connections are designed to provide horizontal connectivity as illustrated in Figure 4(b) , or vertical connectivity as illustrated in Figure 4(a). In certain cases, if required, the inter-modular connections may also be designed to provide both horizontal and vertical connectivity. The term connection refers to complete section which connects lower module to the upper module and one side module to the other side module as shown in Figure 4(a) and 4(b). The inter-modular connection is thus made up of several beams, columns and linking elements depending on the geometry in consideration.

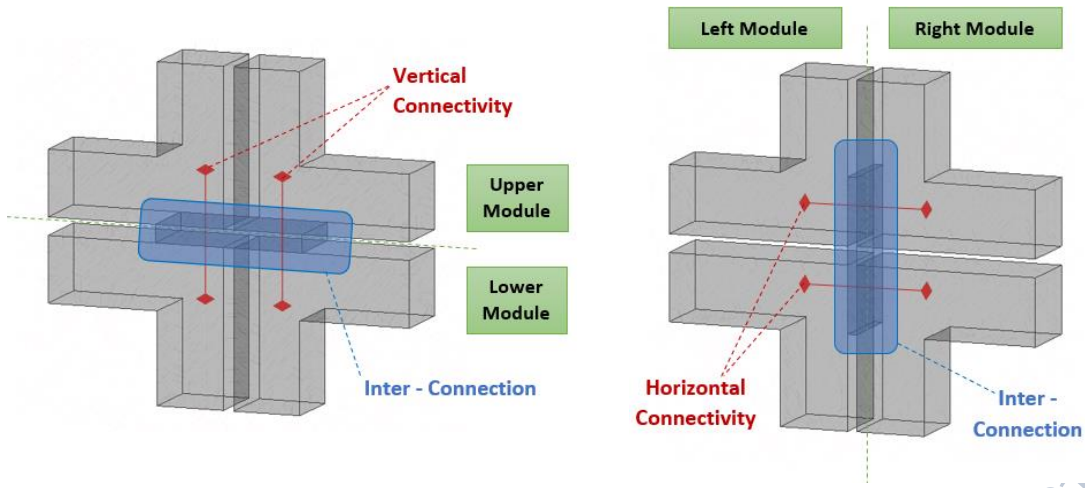

(a) (b)

Figure 4 : (a)Vertical, and (b) Horizonal connectivity of inter modular connections.

Lawson et. al. [16], developed and introduced the common bolted connecting system generally used in the UK and demonstrated the application development of high-rise steel MBS constructions [3,17]. In adjacent modular units, corner columns or angles are typically connected with single bolted side plates or connector plate [7,8]. Bolted connections can be complicated to accommodate module attachment when stacked in three directions, and access to ensure fasteners are provided during the assembly sequence. The use of long slot holes for bolted connections leads to accumulation of tolerance over multiple levels and susceptibility to slip failure in case of an unexpected strong lateral force [8,18]. With friction-grip or pretensioned bolts, the tendency for connection slip can be controlled. Vertical connections can provide a shear key or a plug [19] that helps position modules to provide structural connection where physical access is neither feasible nor practical. Table 1 provides a short list of novel inter-modular connections currently being used in MBSs connections.

Table 1: Modular building connections used in the industry.

Connection Ref.	**Type**	**Illustration**	**Connectivity Features**
Steel bracket connection by Hwan Doh et al.[12]	Inter and/or Intra modular connection	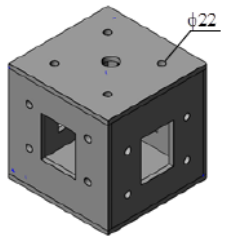	▪ Bolted intermodular connection with steel square hollow section. ▪ Provide vertical and horizontal connectivity.

Bolted connection with plug-in device by Chen et al. [20]	Inter modular connection	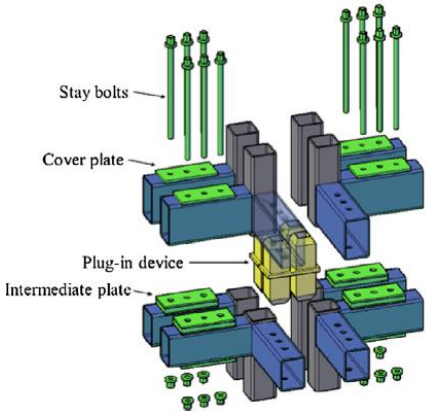	▪ Comprise the beam-to beam high tensile strength bolting system for vertical connections and cast plug-in devices for horizontal connections. ▪ Provide vertical and horizontal connectivity.
VectorBloc connection system by Dhanapal et al. [21]	Inter and/or Intra modular connection	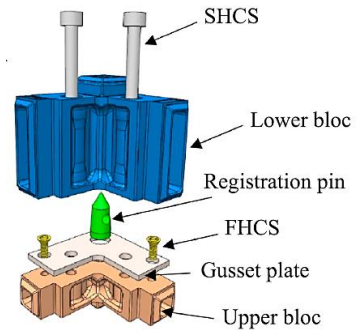	▪ Corner castings will get secured via bolted assembly and transfer plates secured onto the corner castings. ▪ Provide vertical and horizontal connectivity.
Complex bolted end plate connection by Gunawardena [18]	Inter modular connection	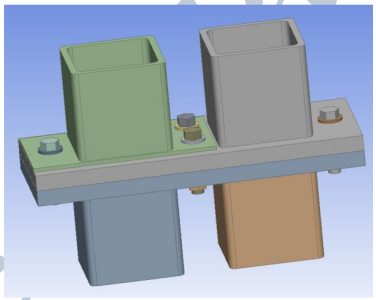	▪ Complete bolted assembly that secures column end plates of different forms. ▪ Provide vertical and horizontal connectivity.
Complex bolted end plate by Sendanayake [22]	Inter modular connection	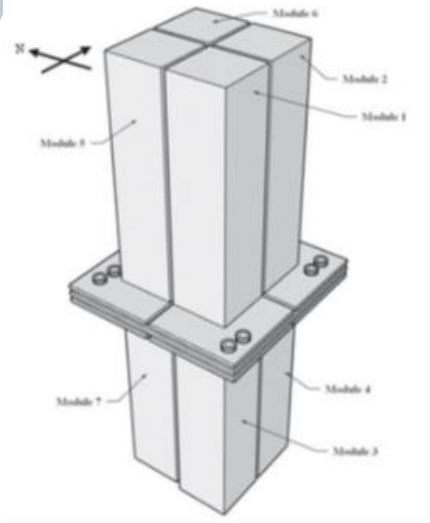	▪ Form a connection between adjacent modules and are capable of transferring both vertical and lateral forces to which the corner supported modules may be subjected to. ▪ To allow connections to be extremely efficient under fluctuating loads, high strength friction grip bolts are used.

Post-tensioned vertical intermodular connection by Lacey et al. [23]	Inter modular connection	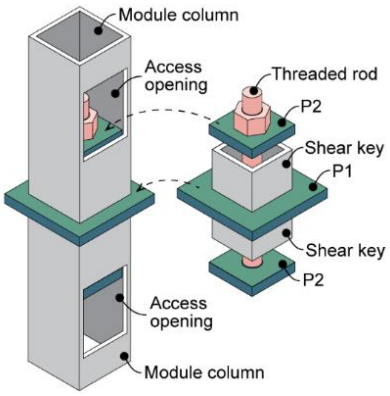	▪ Pre-tensioned threaded rod passed through the columns of modules and a plug- in shear key and is anchored within the zone of inter-connectivity through the aid of access holes. ▪ Provide vertical connectivity.
Blind-bolted connection between modular units by Cho et al. [24]	Inter modular connection	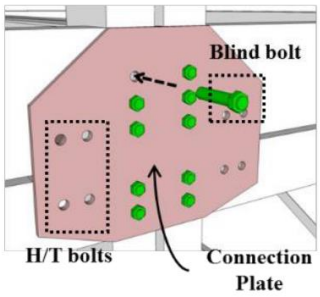	▪ Complete blind-bolted connection with connection plate. ▪ Blind and high-tension (H/T) bolts used. ▪ Provide vertical and horizontal connectivity.
Vertical post-tensioned connection by Sanches and Mercan [25]	Inter modular connection	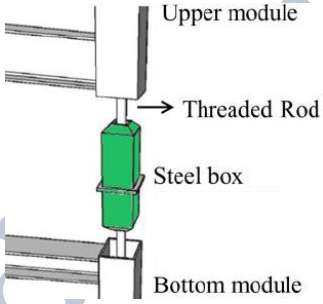	▪ Post tensioned threaded rod passed through the columns of modules, anchored at the ends of a stack of modules. ▪ Provide vertical connectivity.
Bolted connection with rocket-shaped tenon by Deng et al. [26]	Inter and/or Intra modular connection	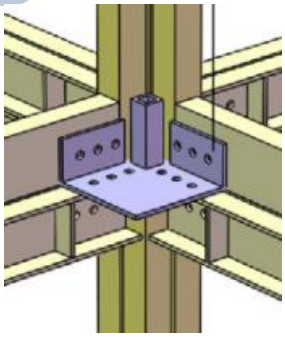	▪ Complete bolted connection with rocket shaped tendons connected to gusset plate. ▪ Provide vertical and horizontal connectivity.
Bolted connection by Choi, Lee and Kim [27]	Inter and/or Intra modular connection	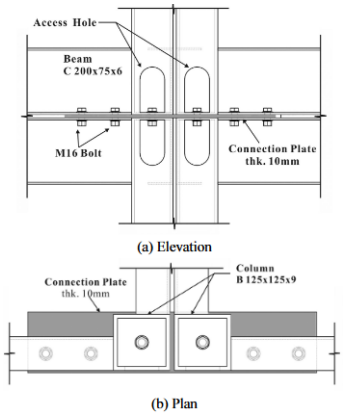	▪ Complete bolted connection with stacked module together through a bolted assembly. ▪ Access holes provided for bolt installation. ▪ Provide vertical and horizontal connectivity.

Interlocking joints connection by Sharafi et al. [28]	Inter modular connection	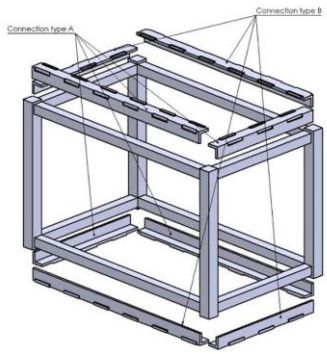	▪ Connection with integrating connections strips which is pair of interlocking joints. ▪ Easy-fit and self-locking mechanical jointing system. ▪ Relative motion in major directions of translation as well as rotation is prevented.
Corner tie connector by Yu and Chen [29]	Inter modular connection	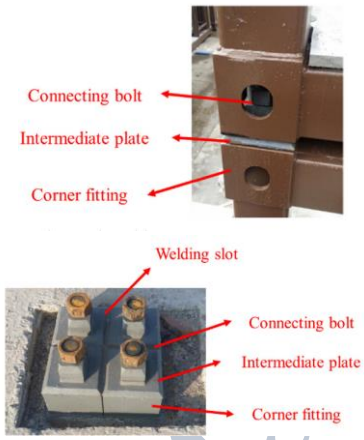	▪ Provide vertical and horizontal connectivity. ▪ Horizontally assembled corner fittings connected by intermediate plates and vertically arranged corner fittings tied together through bolting,

2.2.Intra-modular connection

Intra-modular connections are generally referred to connections within a module, which are similar to conventional connection features. Both welded and bolted connections are used for intra-modular connections of MBSs. Even some well-known novel connections incorporate both welded and bolted connections together in their design [18,21,30,31]. In case of beam-column connections, the bolted connector types used in MBSs comprises double angle cleats [32], single fin plates [17,33,34], and bolted end plates [34]. A moment-resistant connection consists of an end plate or a deep web (or fin) plate, which provide lateral rigidity for low to mid rise MBSs [15]. This is rare in fin plate connections since they are mostly known as basic shear connectors. Fin plate connections specifically, compared to other connections, have relatively low ductility, rotation and moment capacity [35] , which explains why they are only ideal for structures of 3 or less story [8,15]. The utilization of these connections in MBSs, might expose the open modules to the risk of progressive collapse that could result in complete structural failure [35]. In such situations, it might be necessary to provide additional strengthening to fin plate connections, to provide adequate moment capacity. Annan et al. [36] however have researched the framing of steel floors with secondary beams directly welded to the main beams. This is opposed to standard steel construction that use clip angles that enables greater rotation. The welded connections do not inherently allow the rotation of steel members due to hogging moments and axial forces, hence, it is required to develop a connection model to overcome this limitation.

Currently, most MBS constructions in the UK, there are two typical connection mechanisms being employed; (1) fin plate connection and (2) end-plate connection. The type of connection used depends on the section and location of structural component at which they are being utilized as the connection points. These types of simple connections generally referred as pinned connections, have negligible resistance to rotation and are assumed to transmit end shear only. Consequently, these connections at the ultimate limit state do not transfer significant moments. This concept underlies the design of multi-story braced frames in the UK, which is established as 'simple construction,' where the beams are simply supported, and the columns are designed for axial loading and the small moments generated by the end reactions of the beams. The lateral stability is provided to the frame structure by the concrete core or bracing [37]. Figure 5 illustrates a typical flexible end plate beam to column and beam to beam connections. A partial depth or full depth end plate is welded to the end of supported beam in the workshop. And then on-site, the beam with attached end plate is bolted to the supporting beam or column. Even though these types of connections are comparatively inexpensive, the main drawback of utilizing these connections is that these will allow only limited onsite adjustments. In addition to that, the beam lengths are required to be produced within tight limits, further, to accommodate for fabrication and erection tolerances, packs may be used. Perhaps the most widespread of the simple beam connections currently in use in the UK are the end plates [38]. In case of connecting these end plates to a hollow section column, hollo-Bolts, flow drill, blind bolts and/or other special assemblies are utilized.

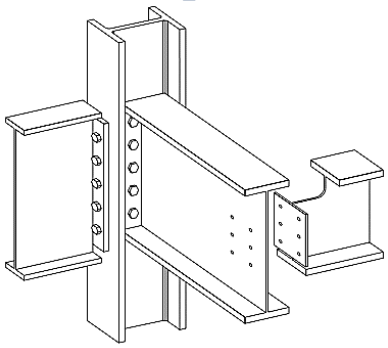

Figure 5: End plate beam to column and beam to beam connections [38].

The fin plate connection points consist of protruding steel plates, welded onto the supporting component, and equipped with holes to link the supporting component using bolt connections. They are also reserved when square hollow sections are used as an edge of a module. Figure 6 illustrates a fin plate connection for linking multiple I-section beams on Universal Column (UC) post. Identifying the appropriate line of action for the shear is essential in the design of the fin plate connection. The shear acts either along the centre of the bolt group connecting the fin plate to the beam web or it acts at the face of the column. Therefore, these two crucial parts should be tested for at least to the minimum moment as the product of the vertical shear and gap between the face of the column or beam web and the middle of the bolt group. Together critical sections are then required to be tested and verified for the resulting moment

combined with the vertical shear. The fin plate welds are sized to be full strength, to accommodate the nominal moments applied. The in-plane rotational capacity of fin plate connections is taken from the out-of-plane bending of the fin plate, from the distortion of the bolt holes in bearing and from the bolt deformation in shear. It should also be noted that the tendency to twist and fail by lateral torsional buckling is high in fin plates with long projections. Most pinned connections, specifically fin plates, should be avoided being considered as torsional and lateral restraints, as it may lead to a considerable reduction in resistance for beams at stability risk [38].

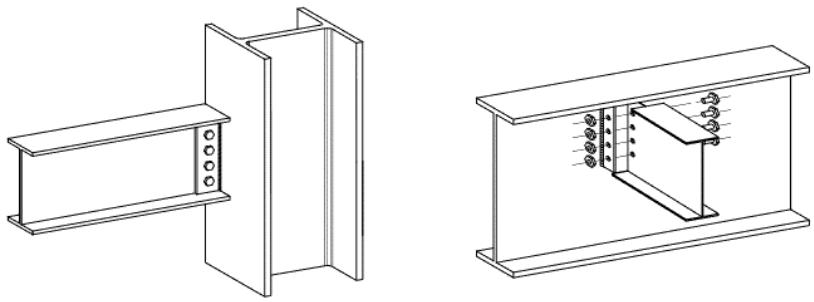

Figure 6: Fin plate beam to column and beam to beam connections [38].

2.3.Module to foundation connection

Module to foundation connection is another crucial part of MBS as it governs the sliding and overturning of entire MBS structures. Specially in case of mid-to-high rise MBSs, it gets more complicated and thus requires more attention. MBSs, particularly in areas with possible heavy wind lateral load, may be subjected to overturning or slipping failures unless connection to the base is sufficiently provided. The base foundations in general may consist of in situ or precast concrete foundations, bored concrete piles, augured steel piles, or in some cases a modular superstructure might get placed on top of a traditional built steel frame at ground or lower floor levels. Figure 7(a) shows the suggested corner fitting connection from Technical specification for modular freight container building [39] where, precast foundation and connecting corner are connected using anchor bolts. As an alternative to the conventional post-fixed or cast-in steel bearing plate, Park et al. [6] developed an embedded column connection as illustrated in Figure 7(b).

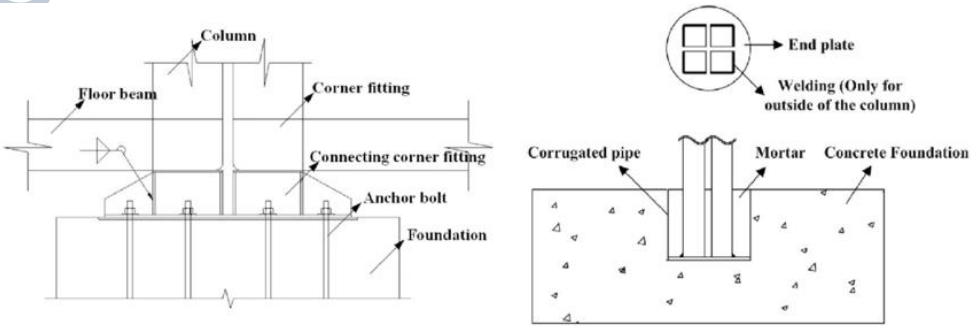

(a) Corner fitting connection (b) Embedded column connection

Figure 7: Typical module to foundation connection [40].

This connection was created to provide good ductility by ensuring the optimum use of the full-length column strength. The major drawback in the application of this connection includes the onsite welding requirement between the MBS columns and the end plate which gets embedded to the concrete foundation [8].

3. Performance Review of Modular Building Connections

3.1.Performance Requirements of Modular Building Connections

It is well known that the mechanical properties of connections, including yield strength, rigidity, and ductile deformation capability, have a substantial effect on total strength, rigidity, stability, and structural safety. In addition, the number of connections influences total costs and construction time, which comprises approximately one-third material costs and two-third labour costs for planning, build and erection [41]. Forces on connections are calculated by carrying out a global study of the MBS structure in consideration, where connection rigidity usually governs the distribution of total force and connection ductility may provide additional safety in overload scenarios. Beam-to-beam connections may be between two parallel or mutually perpendicular beams, where composite parts that increase both total capability and deflection control are allowed. Correspondingly, column-to-column connections are links between vertically adjacent and/or inline columns. Such steel connections are usually materialised either by an assembly of relatively inexpensive and easy to assemble bolts or alternatively by a group of welding components which are expensive, complicated, require close inspection and specialist labour. In addition, the arrangement of welded parts and bolts is necessary to achieve either pinned, rigid or semi-rigid connection behaviour, defined by the overall degree of moment resistance. However, owing to being less labour intensive to both fabricate and to assemble, pinned and/or simple connections are commonly preferred.

Intra-module connections in general would provide the required module stiffness and module to foundation connections would enable the effective load transfer from the overall structure to the ground. The intra-module connectors for MBSs are commonly made offsite in factory environment and hence they are preferred to be simple and conventional connections with less complication. Therefore, modular builders do not seek further advancement in the design of MBSs intra-modular connections. Similarly, although module to foundation connections are part of onsite tasks, due to complications related to unpredictable site conditions and since limited complication in onsite installation have been reported compared to intermodular connections, these connections are generally practiced in its conventional form. In summary, since module to foundation connections necessitate only a one-off on-site work and intra-module connections would be completed off-site, both connections are less likely to have influence over the overall project or construction time of MBSs.

On the other hand, intermodular connections are anticipated to have a profound effect on MBSs construction time and simplicity, as they influence modular attachment. The design of these connections may either help reduce construction time, increase safety, result in cost reduction or it can be the main source to cause numerous abnormalities in MBS overall performance. Thus, inter-modular connections should not only have sufficient strength, rigidity and ductility to fulfil structural specifications, but should also they should meet the required functional and practical needs.

The identified functional needs require inter-modular connections to be: (1) Remotely operable, where direct external or internal access for assembly not required thereby improving onsite safety and avoiding the need for access holes which can lead to undesirable localised effects, (2) Simple in application or installation, with an optimized design which can be operated automatically or semi-automatically and requires minimal manpower, specialist tools, and other resources, (3) Scalable, so that alterations can be done easily to adapt variable load demands depending on the construction demand and section sizes without the need for rigorous analysis, (4) Tolerance-insensitive, so that reasonable amounts of manufacturing and construction tolerances can be accommodated to counter, out-of-verticality and out-of-horizontality in MBS's alignment, (5) Suitable for mass manufacturing, by having simple easily manufacturable components that can be integrated, and (6) Easily demountable, so that relocating and/or replacing modules to comply with future demands or replacement if damaged under extreme events can be made less complicated [42].

3.2. Case Studies on Performance of Selected Modular Building Connections

3.2.1. VectorBloc Connection System

The VectorBloc connection system is an innovative cast steel connector-based connection system developed by VectorBloc Corp. [21]. This connection system is specifically designed for Hollow Structural Steel (HSS) element-based modular building constructions. These connectors are attached to the HSS members of the modules by welding. This design technique aims to build modular, high-precision steel buildings using only HSS parts. The novel feature of the VectorBloc connectors is its ability to accommodate both inter modular and beam-column connections. This allows for faster and easier onsite installation by overcoming the weaknesses of existing MBS connections including issues near cut-off regions, accumulating tolerances, hazardous work under suspended loads, and difficult hoisting procedures [30].

The basic design of VectorBloc was inspired by a design feature of modern freight and shipping containers, known as ISO Corner System of Malcom McLean. Based on the concept of McLean, VectorBloc has incorporated many new features to make the system more appropriate in MBS construction [30]. A single assembly unit of VectorBloc Connection system consist of five main components as shown in Figure 8. By using extruded tapered pins, the alignment issues in connection

design components are appropriately addressed. Connector blocks and gusset plate are directed into place by these tapered pins. This design feature also allows the construction worker to connect the unit from inside of the module when assembling the modules together on site, which eventually helps to reduce the risks related to workers' safety. This connection system also helps to resolve the need for multiple system of components and work methods, allowing a builder to construct buildings of a wide variety of styles economically and securely, from single-family homes to towers of over 20 floors in a multitude of shapes, including but not limited to orthogonal, tapering, radial and curving forms [43].

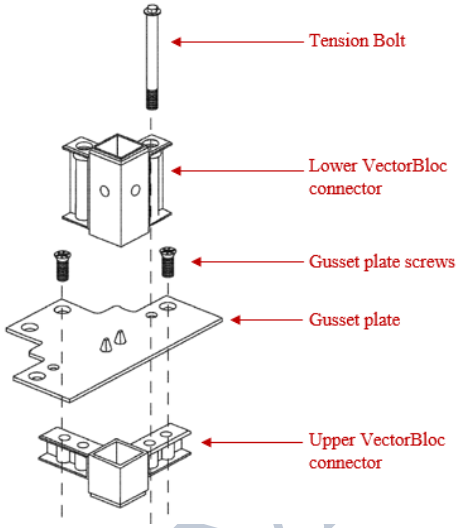

Figure 8: Assembly of VectorBloc connection system [43].

The main drawback of the VectorBloc connection is that the connection design is limited for use in modular buildings with HSS components and that welds are required between the connection and the connected components. On the other hand, it should be noted that, efficient moment connections are formed by employing the welds. Overall, the novel VectorBloc Connection has proven to be affordable, secure and simple without compromising its structural performance.

3.2.2. Connector System for Building Modules by Verbus Systems

Verbus Systems Limited has developed and patented an improved connector system for building modules, as illustrated in Figure 9. Based on the previous WO 2005038155A1 proprietary connector system, the connector system provides greater versatility in configuration and module layout, as well as, more economical production and operation [30]. The revised connector system retains its compatibility ISO/TC 104, in order to, facilitate the interaction with traditional freight handling container equipment.

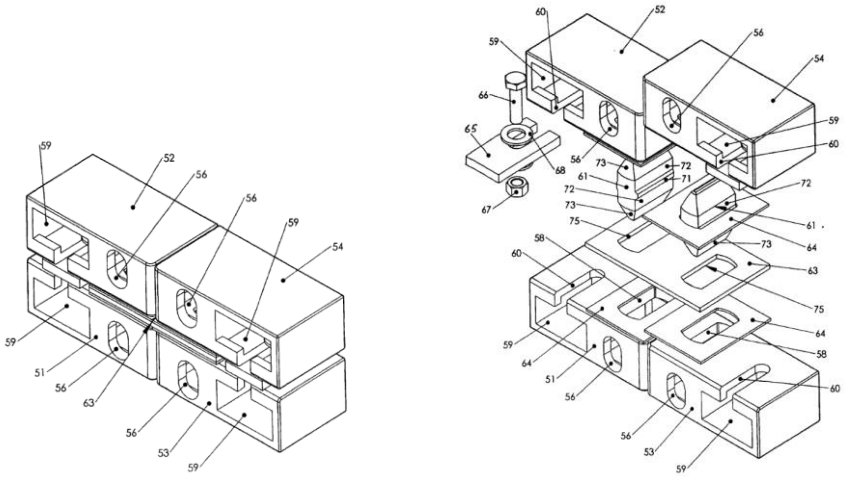

(a) (b)

Figure 9: Exploded view (a) and assembled isometric view (b) of connector system [44].

Verbus Systems' connector for constructing modules is an enhanced connection system for MBS applications. The system has sufficient structural capability to enable the construction of multi-story, high rise MBS. The design has components that allow different architectural features such as brick cladding to be attached to the system. This novel Verbus connection system also provides enhanced alignment controls. The main drawback of the design in industrial application is the increased material volume and effort for fabrication of various complicated components of the connection system. Furthermore, to eliminate orientation difficulties, the first set of smaller modules must be set up with absolute accuracy, to enable effective use of the connector system.

3.2.3. Bolted Endplate connection systems by Gunawardena [18] and Sendanayake [22]

This proposed connection shown in Figure 10, is intended to transfer loads both vertically and horizontally as expected from a corner supporting system. One such unit of these connection will both vertically and horizontally link four neighboring modules. In the loading history the laboratory investigations, the connection designs have exhibited slip failure quite early. Hence, for the design purpose, the studies considered the connection as a slip critical joint.

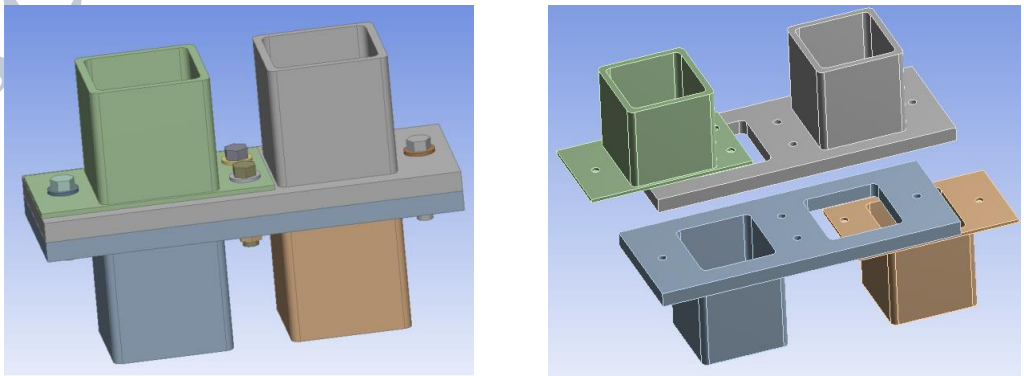

Figure 10: Images of a 3D computer model of the module to module connection and an exploded view showing the four main parts that comprise the connection [18].

The experiment conducted and discussed in the study by Gunawardena [18] was a valuable evaluation of the proposed modular connection's behavior against lateral loads. This is critical in high rise modular building construction, and in addition it has also offered appropriate validation for the study of the finite elements. Further the studies also recommended experiments and analysis to investigate more severe loading conditions to accommodate cyclic loads on either full scaled or scaled specimens to study by physically observing the failure mechanisms and behavior of proposed connections under severe dynamic loading conditions [18]. The research study also highlighted the importance of finite element analysis and suggested further analysis accommodating various loading conditions with different modification to the proposed connection design [18].

Sendanayake [22] developed a novel connection system as in Figure 11, which contributes towards energy dissipation within module units in MBSs during seismic events and to support enabling to transfer the potential failure points to the connections from critical columns [22]. Here the connections were designed to be replaced after a seismic event. The proposed connection models and their numerical modelling analysis were validated against experimental and numerical results from the connection model by Gunawardena [18]. Both connections exhibit a design similarity by forming a junction between four adjacent modular units. The study describes that the proposed connection system can improve the energy dissipation and the structural capacity of MBSs compared to the conventional bolt joints used, as the standard bolted connections lacks the additional resilient layers or connector plate which is included in the proposed connection design [22].

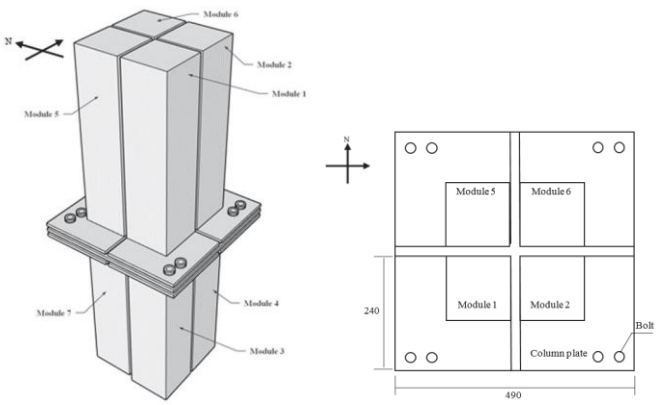

Figure 11: 3D view of inter-modular connection at an interior junction of eight modules (transverse beams are omitted for clarity) (b) Plan view of the interior connection [22].

To mitigate the adverse behavior of structure after a seismic event, this research study has proposed two variations of connection designs for joining adjacent modules in the construction of medium-rise steel modular structures which can shift the failure region away from the column to the connection point. The connections were designed with the capacity to absorb greater energy from the structure under seismic loading condition which adds greater value to the MBS construction as a cost effective and efficient

solution in the seismic regions. The study assessed and ensured the satisfactory performance and viability of the proposed connection design as an intermodular connection under monotonic and cyclic loads by using numerical approach [31].

3.2.4. Vertical Post-Tensioned Connections by Zheng et al. [42], Sanches et. Al. [25] and Lacey et al. [23].

The concept of post-tensioned modular system shown in Figure 12(a) was first introduced by Zheng et al. [45] in 2012, presenting a brief analytical and numerical review which was attributed to the Powerwall building system. And following its application in MBSs, recently in 2019, Sanches et al. [25] developed and investigated the performance of a vertical post-tensioned connection (Figure 12(b)) through an experimental study. The study concluded that the post tension connections are best alternate for onsite welding as it behaves like a welded connection.

Later in the same year, highlighting the importance of the shear force-slip behavior in the MBS connections and the need for a more accurate model for the initial slip behavior to ensure assembly tolerances to avoid potentially damaging accumulation of slip, a study was initiated by Lacey et al. [23] to develop more accurate initial slip behavior model for post-tensioned connections in MBSs [23]. Long slotted bolt holes in the MBS connections provide tolerance for the positioning of the modules during onsite installation. This provision of tolerances may allow slip displacements which could get accumulated across the overall building height triggering additional damage caused by P-delta effects. Considering that, a new post-tensioned tie rod connection as illustrated in Figure 13, which permits vertical connection between modules without the requirement for external access was developed and was investigated. Experimental and numerical studies with parametric studies were conducted to understand the shear force displacement behavior of connection under quasi-static monotonic loading. Furthermore, in order to enable the development of a suitable model for the initial slip stiffness, the initial portion of the load-slip behavior was focused.

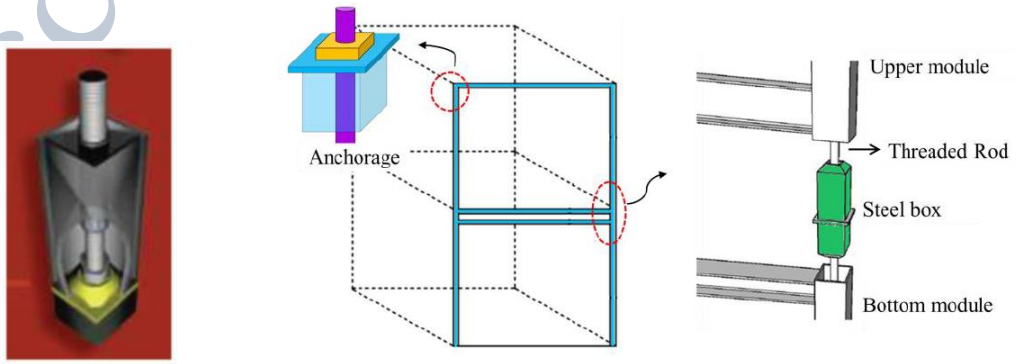

(a) (b)

Figure 12: Proposed post-tensioned connections; (a) Tie rod connection [45] (b) Vertical post-tensioned connection for modular steel buildings [25].

The connection proposed by Lacey et al. [23] comprises a shear key in combination with a post tensioned tie rod which is located inside of the hollow steel sections which form the module columns. As illustrated in Figure 13, the shear key component of the connection is made up of two square hollow sections which are shop welded to a plate (P1) in the top and bottom. The central hole in the plate P1 allows a threaded rod to pass through. And in the module columns, an access opening is provided, and within each of the columns as shown, the plate P2 is shop welded. The shear key part will be positioned in the lower module column and during the on-site assembly the lower module will be initially lifted and be mounted in its final location within the overall structure. Later, with the help of shear key attached to the lower module, which is serving to locate the upper module in position as it is lowered by the crane, the upper module will be lifted and be placed on top of the lower module. One the upper module is located on top the lower module, from inside the module, through the access opening in the column section the tie rod will be installed and will be added tension as required.

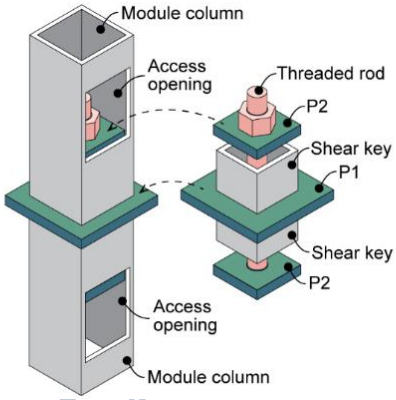

Figure 13: Proposed post-tensioned vertical intermodular connection detail by Lacey et al. [23].

The proposed post-tensioned vertical intermodular connection provides a simple, visually pleasing detail and most of the connection elements are shielded from an external view. The access opening in the column wall allows the tie rod to get mounted from inside the module, minimizing the need for working on heights during the construction onsite supporting to ensure safety of workers during onsite assembly of modules. If the MBS requires to be removed and assembled on another site, this connection facilitates easy disassembly of vertical connectivity with simple relocation of the tie rod component.

When focusing on the downsides of the proposed connection, this design detail will only allow connectivity within modules in vertical direction. In that case, an addition to the detail can be made to facilitate horizontal connectivity between modules. The detail has potentially complicated descriptions of the welding location, where the plate is getting welded within the hollow section. Still the study suggests that, for the column size adopted (75mm) in the study, the welding process was found reasonable [23]. Only a single tie rod is being used in as the threaded rod, but due to its large size in diameter the tensioning of rod might become a difficult task. Access openings has to be provided in the

internal finishes of the module and in the steel column wall to allow for tensioning of the tie rod during site installation. and to ensure the strength of the column is not compromised, care should be taken in the selection of the opening size. During the design MBS units, it is essential to consider the reduction in the loading capacities of the steel hollow section. In order to limit stress concentrations and suit the tensioning procedure the opening shape may be refined.

3.2.5. Steel Bracket Connection design by Jeung Hwan Doh et.al [12]

This steel bracket connection illustrated in Figure 14(a) is used in Chinese construction and for the purpose of verification for use in relevant Australian construction projects was further tested and investigated at Griffith University in Australia [12]. These steel box assembly are considered more flexible compared to the conventional bolted connections as they can be attached to column and/or beam elements as intra modular connection or if required, can be used to connect to each other as inter modular connection. In that way it was referred as a universal connector serving multiple functions as depicted in the Figure 14(c) which illustrates a real scale MBS unit assembled together using box connector.

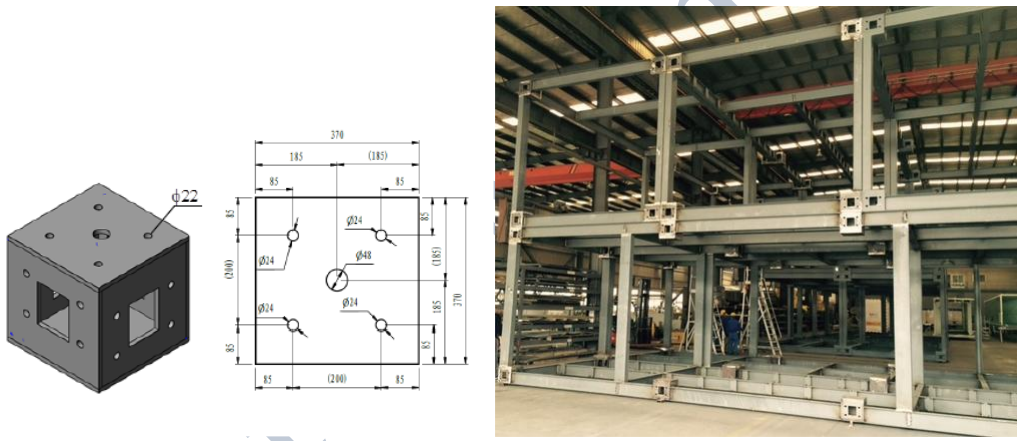

(a) (b) (c)

Figure 14: Steel bracket (a) design details and its (b) assembled modules in a warehouse [12].

The steel modular box connector is a simple design which has identical dimensions, consisting of hollow cube sections with a wall thickness of 15 mm with overall cube dimension of 370 × 370 × 370 mm as presented in Figure 14(b). This cube connection consists of 6 differing faces: (1) one plain face, (2) one face with four 24-mm-diameter holes for bolts and a larger 48-mm- diameter hole in the center for transportation purposes, (3) two faces with four 24-mm- diameter holes for bolts and a rectangular cut-out for access, and the rest (4) two faces with rectangular cut-outs for the use of assembly tools. The connection brackets were made of Q235B steel, which is conventionally used in Chinese steel construction industry and it uses 22 mm (M22) diameter bolts with steel grade of 8.8[12]. The experimental studies conducted on the box connectors, to investigate the response of the steel bracket connection under different loading conditions concluded that the bolt failure in the connections happened due to the tensile capacity of bolts being exceeded in both simply supported and shear loading

tests. This tensile failure also caused connections to fail under combined shear and tension actions or a bolt prying failure. There was no evidence of bracket (plate) failures in the connections, and the failures were in bolt joints which was in a ductile manner. The finite element method using Strand7 software [46] was employed in this study as an analytical method for the comparison of the test results. The research suggested further improvement in the model for a comprehensive investigation of connection behavior in future to ensure an effective design optimization of steel bracket connection with variables in design parameters such as bolt hole spacing, wall thickness, and also bolt hole size of the steel bracket connector [12]. Therefore, considering that this paper developed and validated the steel bracket connection model in ABAQUS[47] using the experimental data from Doh et al.[12] which is further illustrated under section 5.

4. Inter-modular connection model development and analysis

Typically, steel MBS are classified as steel structures and their behaviour is that of frame structures. Therefore, MBS can be designed using the prescribed standards Eurocode 3 [48] or BS 5950 [49] (for hot-rolled steel components) and Eurocode 3 [48] (for CFS components). The characteristics and design of connections used to link the modular components of MBS depend on their geometrical profile, the positioning, design and scale of the acting loads, available equipment, the manufacturing and erection aspects, and the associated costs. Popular steel connections used in conventional MBS constructions include; splices (cover plate connections), gusset plate connections, framed connections where only webs are connected and moment connections where both flange and webs are connected. The design checks, procedures and detailing requirements applicable to fin plate and partial depth and full depth end plates connections design are covered in the 'Green Book' (SCI P358) as a simplified version of EN 1993-1-8 [50]. For conventional steel connections, relevant design models such as those listed in Table 2 can be found in the current design standards and specifications. But specifically, for intermodular connections, due to uncertainty in design, no specific standards are available and the deign models are being studied by many researchers around the world.

Table 2: Existing design standards for traditional MBS connections.

Design codes and standards	Notes
Eurocode 3: Design of steel structures – Part 1-8: Design of joints [50]	Defines connections made with bolts – including bolted joints, riveted joints and welded joints and pins.
AS 4100 and AS/NZS 5131 [51],[52]	General design of connection elements including bolts and welds.
Specification for Structural Joints Using High-Strength Bolts [53]	Design specifications with an emphasis on installation requirements of high strength bolts; Slip testing procedures.

ASTM A325/ A490/ A490M [54], [55]	Design specifications for high strength structural bolts used in structural steel connections.
Specification for Structural Steel Buildings, ANSI/AISC 360-16 [56]	General design guidance for steel connection elements.

4.1.Experimental testing

The experiments conducted on MBS connections from the previous research studies are outlined in Table 3. Two major types of loading related to modular buildings were considered in the literature: (1) quasi-static monotonic and (2) cyclic. In the experimental studies, the interaction between distinct individual vertical connection and horizontal connection, or potential interaction among adjacent columns have not been considered. As seen in Table 3, multiple studies have been performed on the cyclic loading of full-scale, laterally and axially loaded joints. To induce a bending moment at the joints, the lateral load has been applied in order to document/record the momentary rotation behaviour at connection points [13]. Cyclic loading was carried out to determine the seismic behaviour of the joints, providing details about their time history dependent behaviour and their strength and stiffness[57].

Table 3: Experimental testing on steel MBS connections.

Connection Ref.	Experimental setups	Description
Box connector by Hwan Doh et al. [12]	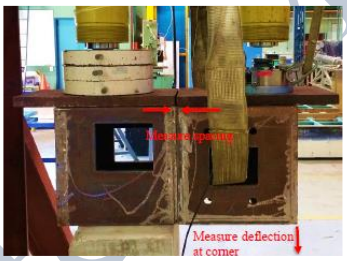 	• Performed shear loading (above) and simply supported (below) tests. • A 90 tonne (882.9 kN) capacity loading jack was used to apply the load.
Vertical post-tensioned connector by Sanches and Mercan [25]	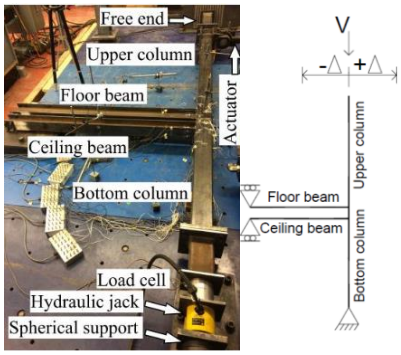	• Using a hydraulic actuator with maximum stroke of ±127 mm, with a fixed axial load, Quasi static cyclic lateral load testing was conducted. • Constant axial load of 100 kN was applied by a hydraulic jack.

VectorBloc connection system by Dhanapal et al. [21]	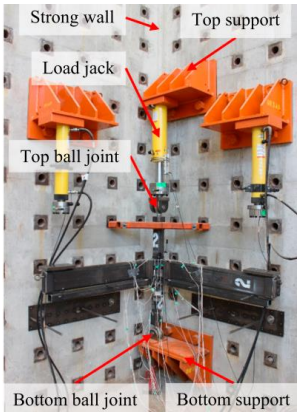	• One specimen was tested under axial tension load and other one was subjected to axial compression load. • At the column ends, pin roller boundary conditions were provided. • Measurements were recorded using two linear variable differential transducers connected to the specimen.
Complex bolted end plate connection by Gunawardena [18]		• 1-direction (shear) force-displacement. • Load was applied at a rate of 0.1 mm/min in 500 kN compression load cell. • Strain was measured by non-contact digital image correlation (ARAMIS).
Connection model by Lacey et al. [58]	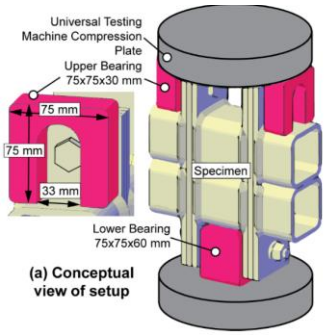	• To investigate the effect on the force-displacement behaviour, slotted holes were included. • Compression load from Shimadzu AGS-300kNX universal testing machine used to test connection for shear.
Bolted Steel plate connection by Lee et al. [59]	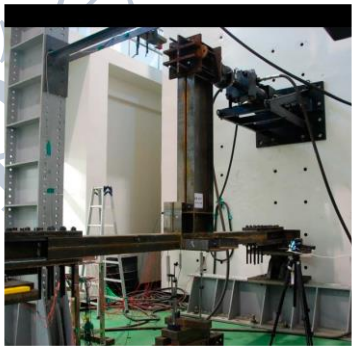	• Beam column joint including ceiling bracket connection was investigated for moment-rotation behaviour under cyclic loading. • An actuator used for cyclic loading; based on the Korean Building Code [60] displacement controlled for verification of a column-beam joint.
Post-tensioned vertical intermodular connection by Lacey et al. [23]	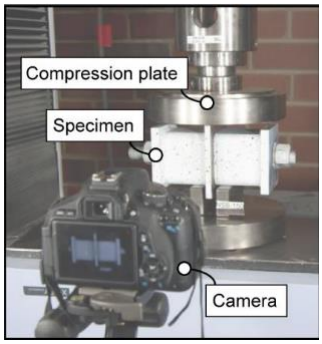	• Using a Shimadzu 300kN universal testing machine, loaded in compression starting from zero and increasing at a rate of 0.15 kN/s; A maximum load of 200 kN was applied. • Following the method given in Annex G of EN 1090-2 [61], Slip factor testing was conducted.

Bolted connector with plug-in method by Chen et al. [62]	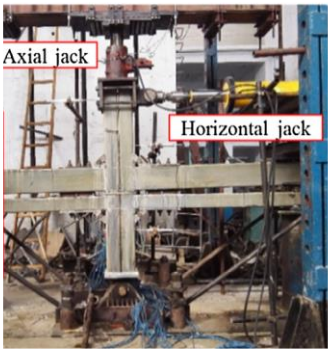	• Inter and intra modular connections (beam column joint) were investigated for moment-rotation behaviour using hydraulic jacks 100t and 200t. • Combined axial and lateral load; axial load 20% and 10% of column yield load Static monotonic and quasi-static cyclic loading based on JGJ 101-96 [63].
Blind-bolted connection between modular units by Cho et al. [24]	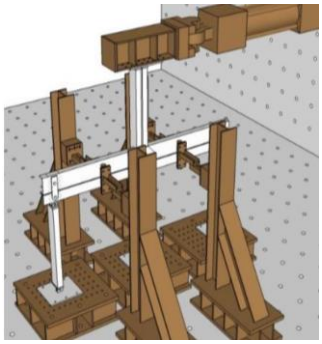	• Using the hydraulic actuator with a maximum capacity of 500 kN which allows the displacement-based loading control, Cyclic loading was applied to the specimen.

4.2.Numerical modelling

For partial analysis of MBSs, structures are usually broken down into individual components. Finite element analysis is used for modelling connections, which integrates the resulting behaviours in a different application within a structural analysis of the overall frame element. Semi-rigid connections are generally utilized in MBSs for which global analysis can be established with inclusion of the behaviour and stiffness[64]. In recent decades, the performance and accuracy of finite-element modelling software and computing power of computers has been substantially enhanced. Based on such technological advancement, finite element method, as a numerical modelling technique has become an effective tool for researching complex subjects and being a supplement to the minimal experimental data[65]. In recent research studies, the finite element modelling of connections is frequently performed using ABAQUS[47], ANSYS[66], SolidWorks [67] or IDEA StatiCa [68]. In case of global analysis of MBSs, a variety of commercial software packages have been utilized which includes SAP2000 Nonlinear[69], ETABS[70], ABAQUS[47] and ANSYS[66]. For incremental dynamic analysis, and pushover analysis, in the specific field of earthquake engineering, OpenSees[71] and SeismoStruct[72] have been adopted.

5. Validation of Steel Bracket Connection model: Numerical Modelling Approach

Steel bracket connections are often used as inter and/or intra modular connections for modular buildings in China, and it was evaluated at Griffith University in Australia [12] with the intention of ensuring its applicability in comparable Australian modular building projects in the future. The assembly of the steel

boxes in the connections may be fairly versatile as they can be joined to columns and beams and can be linked to each other to increase the number of structural components that can be attached. This section describes the preliminary finite element model developed and validated for a tested inter-modular connection, steel bracket connection. As discussed under section 3.5, Doh et al.[12] assessed the performance of the steel bracket connection through the experimental program and numerical analysis using Stand 7 [46]. The research suggested further improvement in the model for a comprehensive investigation of connection behaviour to ensure an effective design optimization of steel bracket connection. Therefore in this study, the steel bracket connection subjected to shear loading was modelled using finite element modelling software, ABAQUS[73]. Figure 15 shows the schematic diagram of the assembled and dismantled view of the steel bracket connection assembly. The steel bracket connection consists of two identical hollow cube sections (370 mm × 370 mm × 370 mm) with 15 mm thickness plates and connected by 4 number of bolts. The bolt holes are 24 mm in diameter. The steel bracket connection hollow cubes are made of Q235B steel while the bolts are M22 type with a steel grade of 8.8.

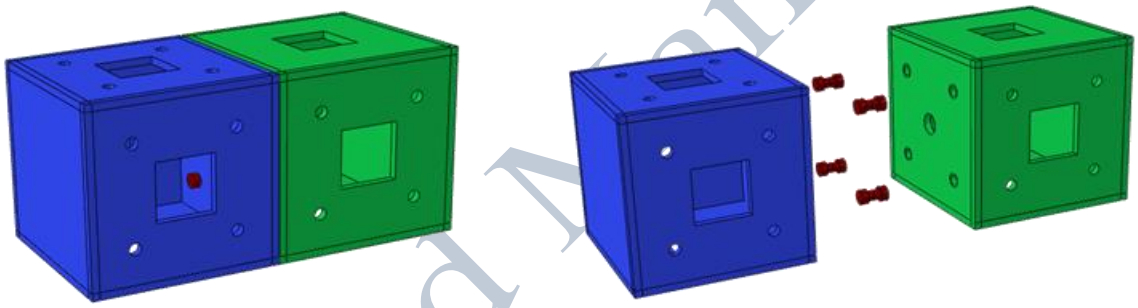

(a) Assembled connection (b) Dismantled connection

Figure 15: Schematic diagram of the steel bracket connection.

Figure 16 depicts the test set-up of the steel bracket connection subject to shear loading. Here, one hollow cube (left in Figure 16a) was given with fixed boundary condition at top and bottom while a vertical load was applied to the other hollow cube (right in Figure 16a) from the top. Since static vertical loading was assigned, shear loading was ensured, and the load-carrying capacity of the assembly was determined. In addition, vertical deflection at the corner and separation between two brackets at the top were measured at failure load. The finite element model of the steel bracket connection was developed with the reported dimensions used in the test. The bolts and hollow cubes were modelled using the C3D8R element type available in ABAQUS element library. C3D8R is a general-purpose 8-node linear brick element with reduced integration and suitable to model the solid components. The bolts and the hollow tubes were refined with a structured hexahedral mesh technique while the edges of the bolt holes were seeded with 12 elements. The details of the finite element mesh of the components are shown in Figure 17.

(a) Front view (b) 3D view

Figure 16: Test set-up for shear loading [12].

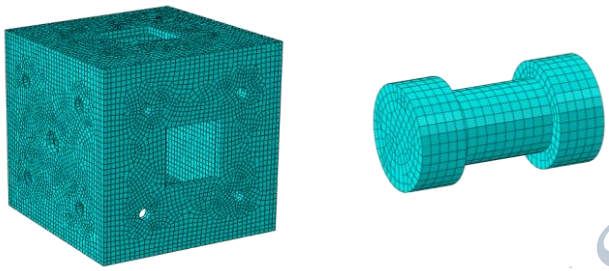

(a) Hollow cube (b) Bolt

Figure 17: Mesh technique used in modelling.

The surface contact modelling in the considered steel bracket connection is highly sensitive. Therefore, more care was given to model the surface-to-surface contact simulation using appropriate contact properties. The contact between the two bracket surfaces was modelled using the tangential behaviour option with a penalty friction value of 0.2 and a hard contact normal behaviour. Similarly, the contact between the bolt shank and hole surface, and the contact between the bolt head and hollow cube surface were modelled. For this, a penalty friction coefficient of 0.4 was used. All the surfaces in the bolts were defined as master surface as bolts are generally rigid compared to other steel hollow cubes in bracket connection. Bolt preload was simulated applying a bolt preload force on the middle plane of bolt shank. Figure 18 shows the preloaded bolts. The magnitude of the pretension load was considered as 70% of the minimum tensile strength of the bolt as recommended in EN1993-1-8 [50].

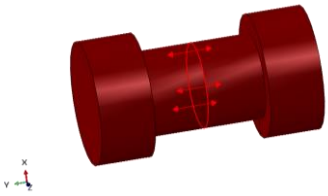

Figure 18: Bolt with the pre-tensioned load.

The obtained results from the finite element analysis of the steel bracket connection were compared with the experimental results and failure modes. The failure mode comparison of the test and finite element modelling is visually compared as illustrated in Figure 19. It can be seen that in addition to shear, deformation failure is also due to bending. This could be argued by the fact that the applied vertical

static load has created bending effect to the bolt due to the eccentricity. Moreover, comparisons of the bolt deformation and spacing between two steel brackets are illustrated in Figure 20.

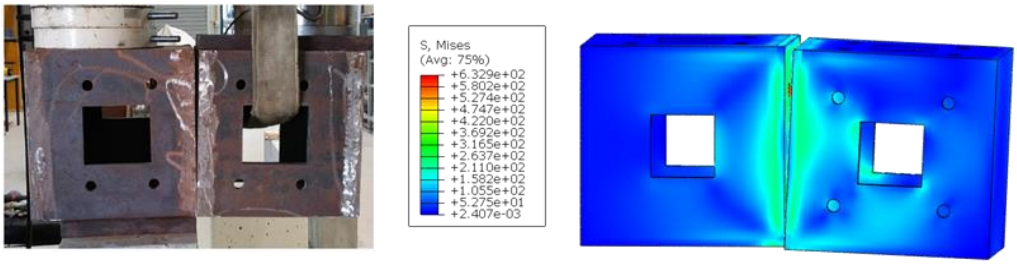

Figure 19: Failure mode comparison between test [12] and finite element modelling of steel bracket connection subjected to the shear load.

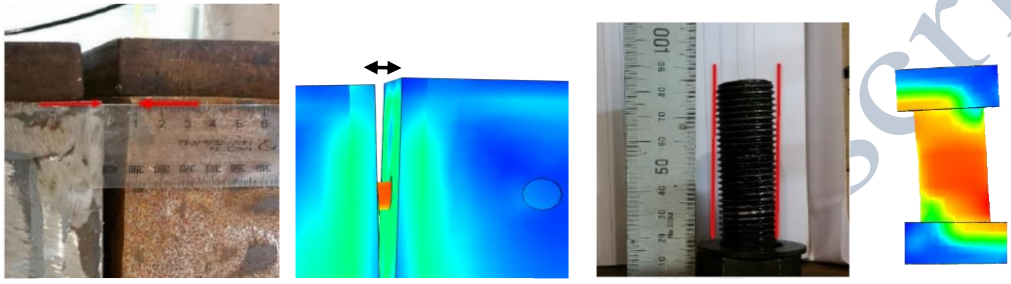

(b) Separation between steel brackets (a) Deformation of bolts

Figure 20: Test [12] and finite element modelling Comparison of bolt deformation and separation between the steel brackets.

The results obtained for the load-carrying capacity of steel bracket connection subjected to shear load is 416.5 kN (average of two identical tests). Therefore, the shear capacity of each bolt from the test can be taken as 104.13 kN [12]. The behaviour of load resisted by each bolt with the slip of the bolt is presented in Figure 21. It can be seen that the typical three stages can be seen in the graphs when a bolt subject to shear. These are friction stage, slip stage and bearing stage [74]. The behaviour of high-strength bolts undergoing combined shear and bending stress is explained in Figure 22 [75]. It can be seen that similar behaviour is predicted by the developed finite element model of bolts in steel bracket connection. The ultimate shear load (123 kN) of the bolt from finite element analysis is slightly higher compared to test capacity. This could be due to the assumptions considered in finite element modelling.

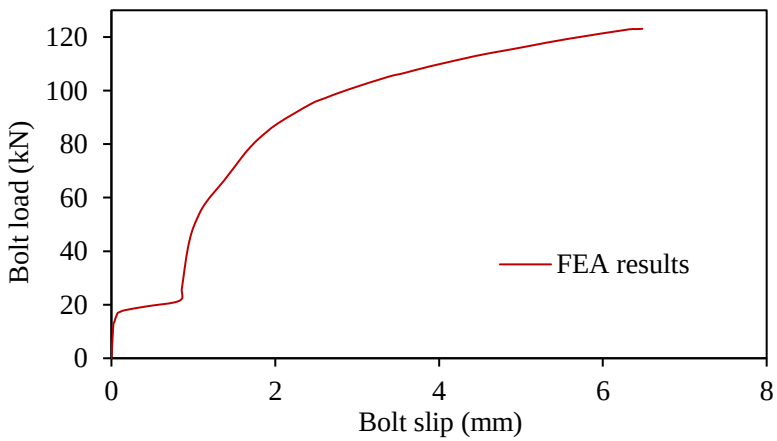

Figure 21: Behaviour of bolts in FEA when steel bracket connection subjected to shear load.

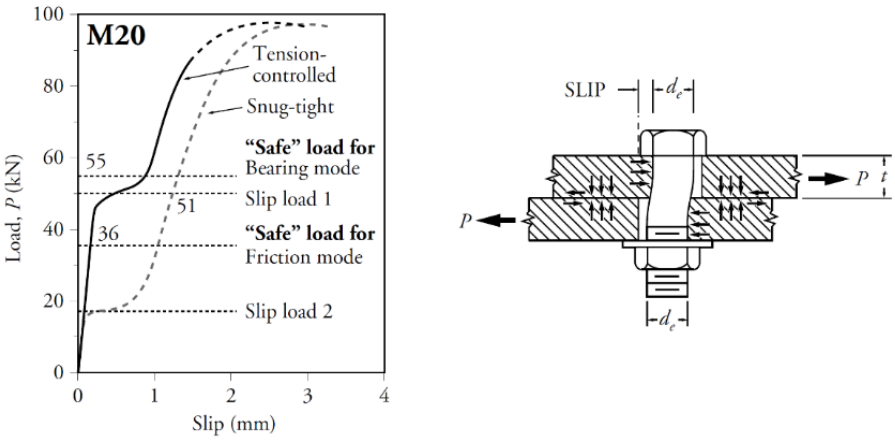

Figure 22: Behaviour of higher strength bolts subject to combined shear and bearing stress [75].

The finite element simulation of the inter-modular steel bracket connection demonstrated that the behaviour of modular connections could be assessed with reasonable accuracy. Therefore, similar kind of finite element techniques can be employed to assess any intermodular connections to get an improved understanding. Similarly, more preliminary studies of any proposed inter-modular connections could be performed using finite element study and based on that, design modifications to the connection could be made before undergoing expensive and time-consuming tests.

6. Challenges, knowledge gap and future research prospects in design of MBS connections

6.1.Intra modular connections

EC3 provides the design formulas and calculations for the purlin-to-sheeting joint rotational stiffness. On the basis of test results [76], it was remarked that the EC3 estimation for the purlin-to-sheeting joint rotational stiffness is not reliable as parameters such as purlin thickness, depth, and flange width are ignored or underestimated. In terms of stud-to-track connection, researchers have introduced the joining methods used in light-steel MBS constructions [74,75]. In the construction of cold formed steel buildings, many types of joints can be used, including bolts, pins, rivets, etc. [77,79]. Prior research studies [74,75,77] aimed at improving traditional stud-to-track wall systems indicated that additional screws could be used as an efficient and an effective way to increase the resistance of thin-walled steel systems. While bolts with nut and head are likely to be too strong or rigid in thin wall systems compared to the sections, there may be a substitute for additional screws. The existing standards and specifications have included the design calculations for a single lap screw and bolt joints. However, there are typically gaps maintained between the connected sheets in the cold-formed section components assemblies [79]. The clearance of the joint can decrease the strength of the twisted or bolted connections due to warping or local buckling. This needs to be investigated further. Thin-walled members are often sections that are open sided depending on the application. Transverse loads applied to the cold-formed open section joists do not reach the shear core of the section, resulting in the development of torsion which is transferred to the connection directly. Torsion can generate twisting or warping deformations in the connected areas

that may contribute to local connection failure. To improve the overall structural performance, a more efficient and effective connection method must be established. Corner support modules are susceptible to stability problems when grouped together because of their weak resistance to bending at the beam to post connections. These modules require additional bracing or lateral support to be employed, but in case of smaller buildings racking strength of walls can usually resist any lateral loads [80, 81]. Sufficient connections must be incorporated to efficiently distribute in-plane forces into all modules. These connections are typically made in the form of end plates and bolts in the corners of the modules. To provide the nominal bending resistance to the MBS components, fin plate connections are employed. To withstand significant lateral loads, the MBS structure might require additional bracing or lateral load resisting systems such as for example shear walls, core stairs or lifts [82].

6.2.Screwed and bolted joints

Bolt or screw connections have been commonly used in cold formed steel constructions. Although codified models are available to predict cold formed steel bolt joint initial stiffness and resistance [48], there are still no proposals to determine its overall behaviour that has a direct effect on the overall structural behaviour in the progressive collapse analysis [77, 78, 79, 80] and quasi-plastic analysis [87]. The AISI-S100 specifications offers a model to predict the resistance of connections subject to the combined shear and tension, based only on one failure mode, for example by pull-through [88]. The Chinese technological code [89] of thin walled cold formed steel systems indicates a combined tension and shear interaction model in which the sole shear or tension resistance models, and their related failure models are not explicitly indicated. The structural behaviour of the screw joint, in particular when exposed to combined tension and shear, has seldom been investigated. The utilization of High Strength Steel (HSS) often poses new challenges because of its diverse material properties. One of the main differences is the low ductility of the high strength steel relative to the mild steel, and that the HSS's yield stress is comparatively closer to the ultimate strength. Hence, to address this complication, further analysis is needed to demonstrate the possible consequences for the structural behaviour of HSS connections in MBS structures. The design recommendation shall be made by evaluating the strength, rigidity and ductility of the joints attached by screws.

6.3.Robustness of cold-formed modular structure

The design methods described in current guidelines apply to the framed and load-bearing wall buildings that do not include modular panel systems. An improperly designed unit in the modular structure may lead to different load resistance mechanism. The connections for modular building systems seem to be more complicated than traditional reinforced concrete construction. These guidelines could not cover the design requirements for modular construction systems, and suggestion of connection configurations is not included. In fact, the robustness and the load redistribution capacity of a structure due to removal

of structural elements may be determined by the responses of the load bearing members and the connections between primary elements. The structural characteristics, involving stiffness and strength under tension, shear and rotation actions, of the connection are usually nonlinear and vary depending on the type of connection configuration between modules. The structural behaviour of different connection configurations under normal and abnormal loading conditions and the influence of that on the robustness of the CFS modular constructions have not been widely studied. Connection is regarded as the main dilemma in both cold formed steel structures and MBSs. Varying fasteners, high-strength components, thin-walled segments, and various features made connection a key challenge in the construction of modular building and cold formed steel structures. In the incremental failure phase of MBSs, beam action and catenary action typically lead to mixed loads on the connection.

6.4.Design guidelines

A comprehensive modular structural design approach is important because its poor design has important consequences over total project costs and timeframes [5]. Singleton and Hutchinson [90] have highlighted that, due to a lack of design standards for modular prefabricated houses, the modular techniques have failed to meet the standards of the asset proprietors because collective opinion is that the prefabricated components do not meet the minimum quality specifications and provide long-term efficiency. For a secure construction, any structure's design loads must take all potential conditions into account. As observed from the stress and strain assessments of connections from past studies, the connections exhibit distinct failure mechanisms which can directly be addressed through the design. In contrast to the newer trends towards performance-based design, most international design standards still follow limit state design [18,88]. Different types of MBS connections techniques are being utilized in the current construction industry rather than a particular one, which is probably due to the fact that the currently used types of these techniques are having unique challenges in meeting all the standard design and construction specifications of MBSs. This and many private companies wanting to retain their own intellectual property right which are considered confidential, could be the main reasons for non-availability of specific design codes and standards for intermodular connections.

6.5.Onsite modular assembling techniques

The structural integrity and robustness of the MBS module assemblies are greatly affected by the behaviour and the performance of intermodular connections. It is a crucial task to preserve and to maintain the structural stability of MBSs by means of modular connections under extreme loading conditions [16]. In order to ensure perfect assembly, modular connections can be accessed externally so that the onsite assembling workers can reach the connection points safely and conveniently. More research studies into advanced interlocking systems for MBS connections and the capacities of these systems in terms of automating fast assembly and disassembly would make the construction industry

more effective [92]. Currently, most MBSs have a single array or a plain interface with simple layout where most intermodular connections will be positioned within the perimeter region [13,14]. For the inner relations, though, whether there is sufficient operational access or a special opening, the fourth module to be located cannot be conveniently attached at the base which is covered in other three sides. With similar challenges in onsite assembly of MBSs, the modular design elements with limited and allowable onsite assembly constrains with combination of a secure and comfortable inter-modular connection is required. MBS constructions that involve modules which are fabricated with internal finishes offsite and assembled onsite are referred to as Prefabricated Prefinished Volumetric Construction (PPVC). Poor lifting framework design may contribute significantly to an unbalanced lifting module that can ruin the internal finishes, especially in such PPVC. Multiple pulleys and lifting chains are often necessary during MBS site installation of modules to ensure balanced lifting, and the chain lengths are often altered manually at site which increases the construction time. Positioning accuracy during installation of module is critical to reduce the error accumulation among modules both vertical and horizontally. A proper design of connection which incorporates a component such as locator pins, considering the facilitation of onsite assembly of modules will help overcome or minimize these tolerance accumulations.

Conclusion

This study presents a wide-range review on the modular connections and their current progressions, structural behaviour and challenges in the construction industry. From the review it is evident that on average, the current state-of-the-art for modular connections have achieved only moderate satisfaction in providing the defined functional, structural, and constructional performance requirements. Thus, innovations through research and development are needed regarding modular connections that could allow high uptake of modular structure in multi-storey buildings to further enhance the acceptance and utilization of offsite construction solutions in construction industry. It should be noted, however, while the performance requirements acknowledged were entirely based on understanding of specific functional and constructional needs from past research, the review of existing connections against such requirements were subjective based on the authors' personal interpretation on how a specific system would satisfy a specific need. Accordingly, following are some suggestions for future research and developments,

1. While any connections can be designed to meet performance demands accordingly, only automated or semi-automatic connections are believed to have the ability to resolve those defined constructional as well as functional requirements. Tackling these requirements and providing mass-producible parts which can be simply incorporated and fitted to modular units would further minimize the overall costs, onsite construction time, and improve onsite safety. Incorporation of such innovations and

improvements in a complete modular building structural design system will have a great impact and will develop opportunities to achieve automation in construction.

2. Vibrations and other effects of action caused during module transport may have damaging effects on structural components and joints of modules. Designing to compensate for such effects or countermeasures to mitigate any vibrations impacts or related consequences of the action is critical to ensure that a module is dispatched free of flaws. Therefore, the development of a suitable design for transport vehicles or design of a temporary support system during module transport is crucial.
3. Development of suitable experimental and numerical analysis methods and accurate interpretation of performance under combined actions should be given special consideration. More research is required to better define the efficiency of current connection mechanisms and to reduce the possibility for overdesign.
4. Modules with connections which can accommodate considerable levels of construction and design tolerances without the need for on-site adjustments would prove to be essential.

This paper also presents an advanced finite element model developed based on past research, validating connection behaviour and performance of bolted joints, which provides confidence for improvement of connection design further for practical implementation. Structural tests are time-consuming and expensive though they reflect accurate results. Thus, any necessary modifications or improvements should be incorporated into connections before subjecting them to structural tests. In that case, preliminary finite element modelling is an effective tool to obtain a comprehensive understanding of the connections in terms of its capacity and deformation under a given loading condition. Currently, further research is being carried out by the authors, in order to develop an innovative connection model by studying the structural behaviour of connections through effective experimental and advanced numerical models.

Acknowledgement

The authors would like to acknowledge Innovate UK (Partnership number: 12060), ESS Modular Limited and Northumbria University for the financial support and research facilities.

References

[1] S. Ryan E., *Prefab Architecture: A Guide to Modular Design and Construction*. 2011.

[2] Housing Communities and Local Government Committee, “Fifteenth Report of Session 2017–19 : Modern methods of construction,” London SW1A, 2019.

[3] R. M. Lawson, R. G. Ogden, and R. Bergin, “Application of Modular Construction in High-Rise Buildings,” *J. Archit. Eng.*, vol. 18, no. 2, pp. 148–154, 2012, doi: 10.1061/(asce)ae.1943-

5568.0000057.

[4] A. Fathieh and O. Mercan, "Seismic evaluation of modular steel buildings," *Eng. Struct.*, 2016, doi: 10.1016/j.engstruct.2016.04.054.

[5] R. Mark Lawson and J. Richards, "Modular design for high-rise buildings," 2010, doi: 10.1680/stbu.2010.163.3.151.

[6] K. S. Park, J. Moon, S. S. Lee, K. W. Bae, and C. W. Roeder, "Embedded steel column-to-foundation connection for a modular structural system," *Eng. Struct.*, 2016, doi: 10.1016/j.engstruct.2015.11.034.

[7] H. J. Kim, J. S. Lee, H. Y. Kim, B. H. Cho, Y. Xi, and K. H. Kwon, "An experimental study on Fire resistance of medical modular block," *Steel Compos. Struct.*, 2013, doi: 10.12989/scs.2013.15.1.103.

[8] A. W. Lacey, W. Chen, H. Hao, and K. Bi, "Structural response of modular buildings – An overview," *J. Build. Eng.*, vol. 16, no. December, pp. 45–56, 2018, doi: 10.1016/j.jobe.2017.12.008.

[9] "Tide Construction installs last module on world's tallest modular tower – Buildoffsite." https://www.buildoffsite.com/news/4915/ (accessed Nov. 09, 2020).

[10] "Croydon's modular tower: 'You don't take chances building a skyscraper' | Construction News." https://www.constructionnews.co.uk/buildings/project-reports/101-george-street-22-05-2019/ (accessed Nov. 09, 2020).

[11] J. Y. R. Liew, Y. S. Chua, and Z. Dai, "Steel concrete composite systems for modular construction of high-rise buildings," *Structures*, vol. 21, no. February, pp. 135–149, 2019, doi: 10.1016/j.istruc.2019.02.010.

[12] J. Hwan Doh, N. M. Ho, D. Miller, T. Peters, D. Carlson, and P. Lai, "Steel Bracket Connection on Modular Buildings," *J. Steel Struct. Constr.*, vol. 02, no. 02, 2017, doi: 10.4172/2472-0437.1000121.

[13] A. W. Lacey, W. Chen, H. Hao, and K. Bi, "Review of bolted inter-module connections in modular steel buildings," *J. Build. Eng.*, vol. 23, no. May, pp. 207–219, 2019, doi: 10.1016/j.jobe.2019.01.035.

[14] C. D. Annan, M. A. Youssef, and M. H. El Naggar, "Seismic vulnerability assessment of modular steel buildings," *J. Earthq. Eng.*, 2009, doi: 10.1080/13632460902933881.

[15] M. Lawson, R. Ogden, and C. Goodier, *Design in Modular Construction*. 2014.

[16] X. C. Liu, A. X. Xu, A. L. Zhang, Z. Ni, H. X. Wang, and L. Wu, "Static and seismic experiment for welded joints in modularized prefabricated steel structure," *J. Constr. Steel Res.*, 2015, doi: 10.1016/j.jcsr.2015.05.003.

[17] R. Mark Lawson and J. Richards, "Modular design for high-rise buildings," *Proc. Inst. Civ. Eng. Struct. Build.*, vol. 163, no. 3, pp. 151–164, 2010, doi: 10.1680/stbu.2010.163.3.151.

[18] T. Gunawardena, "Behaviour of Prefabricated Modular Buildings Subjected to Lateral Loads," no. October, pp. 0–1, 2016, [Online]. Available: https://minerva-access.unimelb.edu.au/bitstream/handle/11343/123961/Thesis_Behaviour of Prefabricated Modular Buildings Subjected to Lateral Loads.pdf?sequence=1&isAllowed=y.

[19] S. Mills, D. Grove, and M. Egan, "Breaking the pre-fabricated ceiling: Challenging the limits for modular high-rise," *Glob. Interchang. Resurgence skyscraper city*, 2015.

[20] Z. Chen, J. Liu, Y. Yu, C. Zhou, and R. Yan, "Experimental study of an innovative modular steel building connection," *J. Constr. Steel Res.*, vol. 139, pp. 69–82, Dec. 2017, doi: 10.1016/j.jcsr.2017.09.008.

[21] J. Dhanapal, H. Ghaednia, S. Das, and J. Velocci, "Structural performance of state-of-the-art VectorBloc modular connector under axial loads," *Eng. Struct.*, vol. 183, no. July 2018, pp. 496–509, 2019, doi: 10.1016/j.engstruct.2019.01.023.

[22] S. V. Sendanayake, "Seismic mitigation of steel modular buildings using novel inter-modular connections.," 2020.

[23] A. W. Lacey, W. Chen, H. Hao, K. Bi, and F. J. Tallowin, "Shear behaviour of post-tensioned inter-module connection for modular steel buildings," *J. Constr. Steel Res.*, vol. 162, no. November, 2019, doi: 10.1016/j.jcsr.2019.105707.

[24] B. H. Cho, J. S. Lee, H. Kim, and D. J. Kim, "Structural performance of a new blind-bolted frame modular beam-column connection under lateral loading," *Appl. Sci.*, vol. 9, no. 9, 2019, doi: 10.3390/app9091929.

[25] R. Sanches and O. Mercan, "Vertical post-tensioned connection for modular steel buildings," no. June, pp. 1–8, 2019.

[26] E. F. Deng, J. B. Yan, Y. Ding, L. Zong, Z. X. Li, and X. M. Dai, "Analytical and numerical studies on steel columns with novel connections in modular construction," *Int. J. Steel Struct.*, vol. 17, no. 4, pp. 1613–1626, 2017, doi: 10.1007/s13296-017-1226-5.

[27] K.-S. Choi, H.-C. Lee, and H.-J. Kim, "Influence of Analytical Models on the Seismic Response of Modular Structures," *J. Korea Inst. Struct. Maint. Insp.*, vol. 20, no. 2, pp. 74–85, 2016, doi: 10.11112/jksmi.2016.20.2.074.

[28] P. Sharafi, M. Mortazavi, B. Samali, and H. Ronagh, "Interlocking system for enhancing the integrity of multi-storey modular buildings," *Autom. Constr.*, vol. 85, no. March 2017, pp. 263–272, 2018, doi: 10.1016/j.autcon.2017.10.023.

[29] Y. Yu and Z. Chen, "Rigidity of corrugated plate sidewalls and its effect on the modular structural design," *Eng. Struct.*, vol. 175, no. April, pp. 191–200, 2018, doi: 10.1016/j.engstruct.2018.08.039.

[30] J. Kim, "Development of modular building systems made of innovative steel sections and wall configurations," pp. 1–186, 2019, doi: 10.5204/thesis.eprints.127327.

[31] S. V. Sendanayake, D. P. Thambiratnam, N. Perera, T. Chan, and S. Aghdamy, "Seismic mitigation of steel modular building structures through innovative inter-modular connections," *Heliyon*, vol. 5, no. 11, p. e02751, 2019, doi: 10.1016/j.heliyon.2019.e02751.

[32] A. J. Styles, F. J. Luo, Y. Bai, and J. B. Murray-Parkes, "Effects of joint rotational stiffness on structural responses of multi-story modular buildings," 2016, doi: 10.1680/tfitsi.61279.457.

[33] S. G. Hong, B. H. Cho, K. S. Chung, and J. H. Moon, "Behavior of framed modular building system with double skin steel panels," *J. Constr. Steel Res.*, 2011, doi: 10.1016/j.jcsr.2011.02.002.

[34] T. H. Ha, B. H. Cho, H. Kim, and D. J. Kim, "Development of an Efficient Steel Beam Section for Modular Construction Based on Six-Sigma," *Adv. Mater. Sci. Eng.*, 2016, doi: 10.1155/2016/9687078.

[35] S. Jeyarajan, J. Y. Richard Liew, and C. G. Koh, "Enhancing the robustness of steel-concrete composite buildings under column loss scenarios," *Int. J. Prot. Struct.*, 2015, doi: 10.1260/2041-4196.6.3.529.

[36] C. D. Annan, M. A. Youssef, and M. H. Ei-Naggar, "Effect of directly welded stringer-to-beam connections on the analysis and design of modular steel building floors," *Adv. Struct. Eng.*, 2009, doi: 10.1260/136943309788708400.

[37] "Simple connections - SteelConstruction.info." https://www.steelconstruction.info/Simple_connections (accessed Nov. 30, 2020).

[38] BCSA/SCI Connections Group, *Simple Joints to Eurocode 3 Joints in steel construction*. 2011.

[39] China Steel Association, "CECS 334-2013 (CECS334-2013) ; Technical specification for modular freight container building," 2013.

[40] E. F. Deng *et al.*, "Seismic performance of mid-to-high rise modular steel construction - A critical review," *Thin-Walled Structures*, vol. 155. Elsevier Ltd, p. 106924, Oct. 01, 2020, doi: 10.1016/j.tws.2020.106924.

[41] J. Jing, "Seismic Damage-Resistant System for Modular Steel Structures," The University of Auckland, Auckland, New Zealand, 2016.

[42] S. Srisangeerthanan, M. J. Hashemi, P. Rajeev, E. F. Gad, and S. Fernando, "a Review on Diaphragm Behaviour and Connections for Multi-Story Modular Buildings," *Australas. Struct. Eng. Conf. 2018*, pp. 1–8, 2018.

[43] J. Bowron, J. Gulliford, E. Churchill, J. Cerone, and J. Mallie, "Modular Building Units, And Methods of Constructing and Transporting," 2016.

[44] D. Heather, "Connector system for building modules," US8549796B2, 2008.

[45] T. Zheng, Y. Lu, A. Seeam, A. Usmani, and D. Laurenson, "Characterization and Monitoring of Seismic Performance of Post-Tensioned Steel Modular Structures," *15th WCEE Lisbon 2012*, 2012.

[46] Strand7 Pty Ltd, "Strand7." 2014, [Online]. Available: www.strand7.com.

[47] Abaqus, "ABAQUS Version 6.14," *Dessault Syst.*, 2014.

[48] "Eurocode 3: Design of steel structures," in *Design of Structural Elements*, 2005.

[49] *BS 5950-1:2000 : Structural use of steelwork in building. Code of practice for design. Rolled and welded sections*. 2000.

[50] EN 1993-1-8, *Eurocode 3: Design of steel structures -Part 1-8: Design of joints*. 2005.

[51] Standards Australia, *AS/NZS 5131:2016 Structural steelwork - Fabrication and erection*. 2016.

[52] *AS 4100:2020 : Steel structures. standard by Standards Australia*. Australia, 2020.

[53] R. Committee, "RCSC Specification for Structural Joints Using High-Strength Bolts," vol. 2014, no. April, 2014, [Online]. Available: www.boltcouncil.org.

[54] A. Shrih, A. Rahman, and M. Mahamid, "Finite element analysis of tension-loaded ASTM A325 bolts under simulated fire loading," *J. Struct. Fire Eng.*, 2018, doi: 10.1108/JSFE-06-2016-0006.

[55] W. A. Milek, "Development Of New Specification For Structural Joints Using Astm A325 Or A490 Bolts," 1986.

[56] "AISC. ANSI/AISC 360-16 Specification for Structural Steel Buildings," Chicago, Illinois, USA, 2016.

[57] ATC-24, "Guidelines for cyclic seismic testing of components of steel structures," *Atc-24*, 1992.

[58] A. W. Lacey, W. Chen, H. Hao, and K. Bi, "New interlocking inter-module connection for modular steel buildings: Experimental and numerical studies," *Eng. Struct.*, vol. 198, p. 109465, Nov. 2019, doi: 10.1016/j.engstruct.2019.109465.

[59] S. Lee, J. Park, E. Kwak, S. Shon, C. Kang, and H. Choi, "Verification of the seismic performance of a rigidly connected modular system depending on the shape and size of the ceiling bracket," *Materials (Basel).*, vol. 10, no. 3, 2017, doi: 10.3390/ma10030263.

[60] "NBCK(National Building Codes and standards of Korea)." http://r-nbck.or.kr/en/Sub/Sub_02_01.aspx (accessed Dec. 20, 2020).

[61] EN 1090-2, "Execution of steel structures and aluminium structures - Part 2: Technical requirements for steel structures," *CEN*. 2008.

[62] Z. Chen, J. Liu, and Y. Yu, "Experimental study on interior connections in modular steel buildings," *Eng. Struct.*, vol. 147, pp. 625–638, 2017, doi: 10.1016/j.engstruct.2017.06.002.

[63] "JGJ 101-1996 PDF." https://www.chinesestandard.net/PDF/English.aspx/JGJ101-1996 (accessed Nov. 30, 2020).

[64] E. Bayo, J. M. Cabrero, and B. Gil, "An effective component-based method to model semi-rigid connections for the global analysis of steel and composite structures," *Eng. Struct.*, 2006, doi: 10.1016/j.engstruct.2005.08.001.

[65] H. Zhang, "Connections in cold-formed steel modular building structure systems," no. October, pp. 1–208, 2018, [Online]. Available: http://etheses.bham.ac.uk/id/eprint/8181.

[66] P. C. Kohnke, "ANSYS," in *Finite Element Systems*, 1982.

[67] SolidWorks, "3D CAD Design Software," *Dassault Systèmes*, 2019. .

[68] IDEA StatiCa s.r.o., "IDEA StatiCa." Czech Republic, [Online]. Available: https://www.ideastatica.com/.

[69] CSI, "SAP2000. Analysis Reference Manual," *CSI: Berkeley (CA, USA): Computers and Structures INC*. 2016.

[70] CSI Inc, "ETABS," *Computers & Structures Inc.*, 2020. .

[71] S. Mazzoni, F. McKenna, and M. Scott, "Open system for earthquake engineering simulation (OpenSees)," *Berkeley, Calif.*, 2006.

[72] "SeismoStruct - Seismosoft." https://seismosoft.com/product/seismostruct/ (accessed Nov. 30, 2020).

[73] Simulia, "Abaqus," *Abaqus 6.14*. Dassault Systèmes, 2014.

[74] "Bolt Mechanics." http://www.bgstructuralengineering.com/BGSCM13/BGSCM004/BGSCM00402.htm (accessed Nov. 30, 2020).

[75] B. E. Gorenc, R. Tinyou, and A. Syam, *Steel Designers Handbook*. Sydney, Australia: University of New South Wales Press, 2005.

[76] C. Zhao, J. Yang, F. Wang, and A. H. C. Chan, "Rotational stiffness of cold-formed steel roof purlin-sheeting connections," *Eng. Struct.*, 2014, doi: 10.1016/j.engstruct.2013.10.024.

[77] M. T. . Gorgolewski, P. J. Grubb, and M. Lawson, "Modular Construction using Light Steel Framing - Design of Residential Buildings," pp. 1–112, 2001.

[78] N. S. TRAHAIR, M. A. BRADFORD, D. NETHERCOT, and L. GARDNER, *The behaviour and design of steel structures to EC3*. CRC Press, 2007.

[79] W. Ferdous, Y. Bai, T. D. Ngo, A. Manalo, and P. Mendis, "New advancements, challenges and opportunities of multi-storey modular buildings – A state-of-the-art review," *Eng. Struct.*, vol. 183, no. January, pp. 883–893, 2019, doi: 10.1016/j.engstruct.2019.01.061.

[80] E. F. Deng *et al.*, "Seismic performance of mid-to-high rise modular steel construction - A critical review," *Thin-Walled Structures*, vol. 155. Elsevier Ltd, Oct. 01, 2020, doi: 10.1016/j.tws.2020.106924.

[81] S. Srisangeerthanan, M. J. Hashemi, P. Rajeev, E. Gad, and S. Fernando, "Review of performance requirements for inter-module connections in multi-story modular buildings," *Journal of Building Engineering*, vol. 28. Elsevier Ltd, p. 101087, Mar. 01, 2020, doi: 10.1016/j.jobe.2019.101087.

[82] B. Döring *et al.*, "Integrated pre-fabricated steel technologies for the multi-storey sector,"

Belgium, 2009. doi: 10.2777/41420.

[83] E. P. Stoddart, "Development of component-based connection modelling for steel framed structures subjected to blast or progressive collapse," 2012.

[84] P. M. Stylianidis and D. A. Nethercot, "Modelling of connection behaviour for progressive collapse analysis," *J. Constr. Steel Res.*, 2015, doi: 10.1016/j.jcsr.2015.06.008.

[85] J. Lim and T. Krauthammer, "Progressive collapse analyses of 2D steel-framed structures with different connection models," *Eng. J.*, 2006.

[86] J. L. Liu, "Preventing progressive collapse through strengthening beam-to-column connection, Part 1: Theoretical analysis," *J. Constr. Steel Res.*, 2010, doi: 10.1016/j.jcsr.2009.09.006.

[87] Q. Liu, J. Yang, A. H. C. Chan, and L. Y. Li, "Pseudo-plastic moment resistance of continuous beams with cold-formed sigma sections at internal supports: A numerical study," *Thin-Walled Struct.*, 2011, doi: 10.1016/j.tws.2011.08.007.

[88] X. Zhang, M. Skitmore, and Y. Peng, "Exploring the challenges to industrialized residential building in China," *Habitat Int.*, 2014, doi: 10.1016/j.habitatint.2013.08.005.

[89] *Technical Code of Cold-formed Thin-wall Steel Structures*, GB 50018-2. MOC, AQSIQ, 2002.

[90] M. Singleton and J. Hutchinson, "The development of FRP composites in building construction," 2010.

[91] Z. Ye, K. Giriunas, H. Sezen, G. Wu, and D. C. Feng, "State-of-the-art review and investigation of structural stability in multi-story modular buildings," *J. Build. Eng.*, vol. 33, no. September 2020, p. 101844, 2021, doi: 10.1016/j.jobe.2020.101844.

[92] A. Jammi and A. J. Sanjeevi, "Structural Performance of Modular Buildings: A Review," *Lect. Notes Civ. Eng.*, vol. 77, pp. 19–42, 2021, doi: 10.1007/978-981-15-5195-6_2.