Deep learning-based networks for automated recognition and classification of awkward working postures in construction using wearable insole sensor data

Maxwell Fordjour ANTWI-AFARI[a*], Yazan QAROUT[b], Randa HERZALLAH[c], Shahnawaz ANWER[d], Waleed UMER[e], Yongcheng ZHANG[f], Patrick MANU[g]

[a]Lecturer, Department of Civil Engineering, College of Engineering and Physical Sciences, Aston University, Birmingham, B4 7ET, United Kingdom. Email: m.antwiafari@aston.ac.uk

[b]Informatics, The Manufacturing Technology Centre Ltd, Ansty Park, Coventry, CV7 9JU, United Kingdom. Email: yazan.qarout@gmail.com

[c]Reader, Systems Analytics Research Institute, Aston University, Aston Triangle, Birmingham, B4 7ET, United Kingdom. Email: r.herzallah@aston.ac.uk

[d]Postdoctoral Research Fellow, Department of Building and Real Estate, The Hong Kong Polytechnic University, Room No. ZN1002, Hung Hom, Kowloon, Hong Kong Special Administrative Region. E-mail: shahnawaz.anwer@connect.polyu.hk

[e]Senior Lecturer, Department of Mechanical and Construction Engineering, Northumbria University, NE7 7YT, Newcastle upon Tyne, United Kingdom. Email: waleed.umer@northumbria.ac.uk

[f]Lecturer, Department of Construction Management, Huaiyin Institute of Technology, Huaian, 223003, China. Email: cquzhych@hyit.edu.cn

[g]Reader, Department of Mechanical, Aerospace and Civil Engineering, The University of Manchester, M13 9LP, Manchester, United Kingdom. Email: Patrick.Manu@manchester.ac.uk

***Corresponding author:**
Lecturer, Department of Civil Engineering, College of Engineering and Physical Sciences, Aston University, Birmingham, B4 7ET, United Kingdom. Email: m.antwiafari@aston.ac.uk

Abstract

Among the numerous work-related risk factors, construction workers are often exposed to awkward working postures that may lead them to develop work-related musculoskeletal disorders (WMSDs). To mitigate WMSDs among construction workers, awkward working posture recognition is the first step in proactive WMSD prevention. Several researchers have proposed wearable sensor-based systems and machine learning classifiers for awkward posture recognition. However, these wearable sensor-based systems (e.g., surface electromyography) are either intrusive or require attaching multiple sensors on workers' bodies, which may lead to workers' discomfort and systemic instability, thus, limiting their application on construction sites. In addition, machine learning classifiers are limited to human-specific shallow features which influence model performance. To address these limitations, this study proposes a novel approach by using wearable insole pressure system and recurrent neural network (RNN) models, which automate feature extraction and are widely used for sequential data classification. Therefore, the research objective is to automatically recognize and classify different types of awkward working postures in construction by using deep learning-based networks and wearable insole sensor data. The classification performance of three RNN-based deep learning models, namely: (1) long-short term memory (LSTM), (2) bidirectional LSTM (Bi-LSTM), and (3) gated recurrent units (GRU), was evaluated using plantar pressure data captured by a wearable insole system from workers on construction sites. The experimental results show that GRU model outperforms the other RNN-based deep learning models with a high accuracy of 99.01% and F1-score between 93.19% and 99.39%. These results demonstrate that GRU models can be employed to learn sequential plantar pressure patterns captured by a wearable insole system to recognize and classify different types of awkward working postures. The findings of this study contribute to wearable sensor-based posture-related recognition and classification, thus, enhancing construction workers' health and safety.

Keywords: Awkward working postures; Deep learning networks; Wearable insole pressure system, Work-related musculoskeletal disorders, Work-related risk recognition.

1. Introduction

The construction industry suffers from numerous health and safety problems because construction activities involve diverse resources and physically demanding tasks. In Australia, there were 26 out of 183 fatalities in the construction industry in 2019, which accounted for a 2.2 fatality rate (fatalities per 100,000 workers) across all industries (Safety Work Australia, 2020). Among construction-related health and safety problems, work-related musculoskeletal disorders (WMSDs) are the leading cause of non-fatal occupational injuries (Umer et al., 2017a; Anwer et al., 2021; Anwer et al., 2021). WMSDs refer to a wide range of injuries or disorders that result in pain and/or other sensations in the muscles, nerves, tendons, ligaments, and joints (Wang et al., 2015a). Examples of WMSDs include low back disorders, carpel tunnel syndrome, tendonitis, and bursitis (Umer et al., 2017a; Antwi-Afari et al., 2018a). According to the Health and Safety Executive (HSE) in the UK, WMSDs accounted for 57% of 81,000 work-related ill health cases injuries (HSE, 2020). Gibb et al. (2018) estimated that in the UK, WMSDs costs construction employers about GBP 650 million/year out of a total estimated burden of occupational ill-health cost of about GBP 850 million/year. Given that WMSDs still remain a health and safety problem in construction, there is an urgent need to recognize work-related risk factors that may lead workers to develop WMSDs.

The high prevalence rate of WMSDs among construction workers could be attributed to several work-related physical risk factors, psychosocial stressors, and individual factors (Wang et al., 2015a; Umer et al., 2017b). Taken together, they can lead to work absenteeism, schedule delays, increased cost of medical expenses, loss of income and productivity, and early retirement (Umer et al., 2017a; Yu et al., 2021). Examples of work-related risk factors include repetitive motions,

gender, age, safety concerns, overexertion, awkward working posture, and poor working conditions such as high vibration, and extreme temperature (Wang et al., 2015a; Umer et al., 2020; Anwer et al., 2021; Yu et al., 2021). Among the various work-related risk factors, awkward working postures (e.g., stoop, squat) are the major risk factor that causes WMSDs in construction. According to the Center for Construction Research and Training (CPWR), roofers and painters are on their knees, crouching or stooping more than 60% of the time, and brick masons spend 93% of their time bending and twisting their bodies (CPWR, 2018). Consequently, research on automated recognition of awkward working postures has become relevant to both researchers and practitioners in developing proactive interventions which could aid WMSDs risk factors prevention in construction.

Generally, one of the critical steps to mitigate WMSDs risk factors is to identify an ergonomic risk approach for recognizing a potential work-related risk factor. In the past decades, work-related risk factors were mainly recognized by using ergonomic risk approaches such as observation-based methods (McAtamney and Corlett, 1993; Hignett and McAtamney, 2000). Although these traditional ergonomic risk approaches are simple and less expensive, they mostly involve subjective judgments and a large amount of manual data which make them time-consuming, and error-prone (David, 2005). Alternatively, wearable sensing technologies have been developed to monitor and recognize work-related risk factors effectively, thus preventing WMSDs (Antwi-Afari et al., 2019a). Among them, wearable inertial measurement units (WIMUs) have been widely used for automated recognition and classification of awkward working postures among construction workers (Chen et al., 2017; Valero et al., 2017; Lee et al., 2020). WIMUs-based systems collect acceleration, angular velocity, and geomagnetic field measurements of a worker's bodily

movements, which are used to automatically monitor awkward working postures (Chen et al., 2017; Valero et al., 2017). However, attaching multiple WIMUs-based systems on different body parts not only significantly intrude a worker's task, but also often causes synchronization issues, body discomfort, and sensor stream deviations due to varying sensor locations (Guo et al., 2017).

In recent years, research works on automated recognition and classification of work-related risk factors have demonstrated the application of computational techniques such as machine learning classifiers to train and evaluate classifier performance (Akhavian and Behzadan, 2016; Nath et al., 2018; Ryu et al., 2019; Antwi-Afari et al., 2020a; Umer et al., 2020). Even though these studies have shown promising results, traditional machine learning classifiers implement pattern recognition approaches. These approaches require multiple pre-processing steps such as manual segmentation of continuous time-series sensor data with different window sizes, and further extraction of statistically significant feature vectors, which are inefficient and time-consuming (Portugal et al., 2018). In addition, the use of human-specific shallow features leads to poor performance in incremental learning. Moreover, traditional machine learning classifiers treat each time step of the time-series sensor data as statistically independent, thus, ignoring the temporal relationship between consecutive time steps (Rashid and Louis, 2019). These limitations of traditional machine learning classifiers motivate this current research to use deep learning networks to automatically extract relevant features with spatio-temporal dependency captured by a wearable insole pressure system.

To date, the literature mostly focuses on WIMUs-based systems and machine learning applications for automated recognition and classification of work-related risk factors. Although they provided useful evidence for mitigating WMSD risk factors among construction workers, they were limited

due to attaching intrusive wearable sensor-based systems and adopting machine learning classifiers that use hand-crafted feature extraction methods for model evaluation. To address these limitations, the present study proposed a non-intrusive wearable insole sensor system, which was used to collect plantar pressure data and deep learning-based networks for classification performance. Therefore, the objective of this research was to evaluate a novel approach of using deep learning-based networks and wearable insole sensor data to automatically recognize and classify different types of awkward working postures in construction. Consequently, the current study adopted recurrent neural networks (RNNs), deep learning models to train time-series plantar pressure data captured by a wearable insole pressure sensor. In this study, plantar pressure data were collected from a construction site when construction workers performed several awkward working postures (i.e., overhead working, squatting, stooping, semi-squatting, and one-legged kneeling) during their daily activities. In the context of a real construction site experiment, it was hypothesized that the proposed approach could produce reliable and better performance accuracy for classifying different types of awkward working postures. The findings of this study could not only complement existing wearable sensor-based systems used for work-related risk factors recognition but also provide a novel method that could be beneficial to both researchers and safety managers to mitigate WMSDs risk factors in construction.

2. Research Background

This section mainly presents existing research studies related to ergonomic risk approaches for recognizing work-related risk factors. In addition, extant literature on wearable sensor-based systems for automated recognition and WMSDs prevention are thoroughly discussed. Lastly, the

feasibility of using wearable insole sensor data and deep learning network-based classification in construction is discussed.

2.1. Ergonomic risk approaches for recognizing work-related risk factors

To mitigate the risk of developing WMSDs, several ergonomic risk recognition approaches have been developed. For instance, observational-based approaches involve manual field observations and visual inspections of work-related risk factors and workers' activities by experienced expert observers. Examples of observational-based approaches used for recording and evaluating work-related risk factors include the Ovako Working Analysis System (OWAS) (Kivi and Mattila, 1991), the Rapid Upper Limb Assessment (RULA) (McAtamney and Corlett, 1993), and Rapid Entire Body Assessment (REBA) (Hignett and McAtamney, 2000). While OWAS is designed to recognize awkward postures in workers on manufacturing lines, the RULA tool evaluates ergonomic posture risks by calculating the angles between body parts. Zhang et al. (2018) performed ergonomic posture recognition from site cameras based on OWAS. Although observational-based approaches are applied to numerous work-related risk factors, they are mostly impractical due to the substantial cost, time, subjective judgments by the experts, and technical knowledge required for post-analysis of large amounts of non-heterogeneous data (David, 2005).

Vision-based approaches consist of the use of computer-aided visual sensing technologies, such as single or multi-video cameras, stereo cameras, depth cameras, and MS Kinect, to capture human motions and recognize WMSD risk factors in construction. Ray and Teizer (2012) utilized a depth camera to detect a worker's non-ergonomic postures by modeling the worker's skeleton and measuring its joint angles. Seo et al. (2015) proposed an approach that could perform 3D

biomechanical analysis using visionary data from a stereo camera. While vision-based approaches are intuitive and provide reliable results, they are limited to privacy and ethical issues since cameras are generally perceived as recording devices (Yilmaz et al., 2006). In addition, with the cluttered nature of the construction industry, characterized by diverse categories of specialized resources and risk factors, and continuously changing working conditions, they may result in several technical issues such as illumination and occlusion (Chen and Shen, 2017).

In recent years, several researchers have utilized direct measurement approaches such as wearable sensor-based systems to recognize work-related risk factors for developing WMSDs among construction workers. Examples of these approaches include surface electromyography (sEMG), electrocardiography (ECG), photoplethysmography (PPG), electrodermal activity (EDA), electroencephalogram (EEG), WIMUs-based system, and wearable insole pressure system. Umer et al. (2017b) compared the differences in lumbar biomechanics (i.e., trunk muscle activity and trunk kinematics) during three typical rebar tying postures measured by sEMG and WIMUs. Similarly, Antwi-Afari et al. (2018a) investigated the risk of developing low back disorders in rebar workers by examining muscle activity and spinal kinematics during repetitive rebar lifting tasks by using sEMG and WIMUs. Yan et al. (2017) developed a real-time motion warning personal protective equipment that enables workers' self-awareness and self-management of ergonomically hazardous operational patterns for the prevention of WMSDs based on WIMUs. By using a wearable insole pressure system, Antwi-Afari and colleagues have proposed methods to recognize awkward working postures (Antwi-Afari et al., 2018f), and recognize overexertion-related workers' activities (Antwi-Afari et al., 2020a). While previous studies have made significant contributions for automated recognition of work-related risk factors for mitigating

WMSDs among construction workers, they mostly utilized direct measurement approaches in a laboratory experimental setting. In this regard, whether a wearable insole pressure system would perform well on a real construction dataset remains to be evaluated in this paper.

2.2. Wearable sensor-based systems for automated recognition and WMSDs prevention

Monitoring and recognizing workers' activities and work-related risk factors in real-time play a significant role in evaluating workers' productivity and mitigating WMSDs risks. Consequently, automated recognition of awkward working postures is an initial step for mitigating WMSDs. With recent advancements in information technologies, wearable sensor-based systems are mostly used as ergonomic intervention tools for proactive monitoring and recognizing workers' activities. Combined with computational analyses such as machine learning classifiers, these approaches have demonstrated their feasibility in the construction domain and provided good performance evaluation for recognizing workers' activities and work-related risk factors.

Numerous wearable sensor-based systems such as global positioning system (GPS), wearable biosensors (e.g., sEMG, ECG, PPG, EEG), ultra-wideband (UWB), and radio-frequency identification (RFID) are widely used for monitoring location-based activities, physiological responses, and detecting worker-object interactions (Antwi-Afari et al., 2019a). Caldas et al. (2006) assessed the potential of using GPS sensors to improve the tracking and location of materials on construction sites. Goodrum et al. (2006) developed a tool tracking and inventory system for storing operation and maintenance data by using commercially available active RFID tags. Xing et al. (2020) explored the effects of physical fatigue on the induction of mental fatigue in construction workers in a pilot experimental method by using wearable EEG sensors. Combining

the efforts of previous studies in the application of location tracking and proximity detection wearable sensor-based systems within the construction environment, they all provided reliable and more robust information for enhancing and monitoring construction operations such as workers, materials, and equipment. The main limitation for applying these location tracking and proximity detection wearable sensor-based systems is the need to install tags, sensors, or markers on each individual resource, which is costly and time-consuming and thereby makes deployment on construction sites unsuitable (Teizer et al., 2007).

To overcome these challenges, researchers and practitioners have recently adopted WIMUs-based systems for human activity recognition and work-related risk factors recognition. WIMUs-based systems consist of an accelerometer, gyroscope, and magnetometer that measure 3-axes acceleration, angular velocity, and geomagnetic field, respectively. They are smaller in size, lighter in weight, have high capacity, and provide reliable accuracy for human activity recognition and WMSDs risk prevention. In the past decades, they have been widely used in research disciplines such as rehabilitation, sports science, and healthcare, to provide multimodal interactions, support independent living in elderly people, and context-aware personalized activity assistance (Mantyjarvi et al., 2001; Bao and Intille, 2004; Delrobaei et al., 2018). Mantyjarvi et al. (2001) recognize human ambulation and posture based on acceleration data collected from the hip. Delrobaei et al. (2018) proposed a WIMUs-based system to quantify full-body tremor and to separate tremor-dominant from non-tremor-dominant Parkinson's Disease patients and healthy individuals. In these previous studies, they suggested that WIMU-based systems could serve as a portable ergonomic intervention tool that can be used in the home environment to monitor patients and facilitate therapeutic interventions. In the realm of construction, numerous studies have also

focused on human activity recognition and WMSD prevention by using WMIUs-based systems (Joshua and Varghese, 2010; Valero et al., 2017; Alwasel et al., 2017; Chen et al., 2017). Despite significant efforts, attaching multiple WIMUs-based systems on workers' bodies lead to workers' discomfort and systemic instability, thus, limiting their application on construction sites.

To remedy this situation and considering the rapid development of microelectromechanical systems (MEMS), WIMUs-based systems have become smaller to be incorporated into smart-wearable systems such as smartphones, smartwatches, smart belts, and smart wristbands for recognizing workers' activity and work-related risk factors. Smartphones and smart wearable systems are characterized as unobtrusive because they are embedded with multiple sensor-based systems (e.g., accelerometer, gyroscope, magnetometers, barometer, light and temperature sensors), which provide a self-sufficient data collection, computing, and storage scheme. In addition, they are more intelligent, intuitive, and ubiquitous wearable systems for wireless communication networks with modern software development environments and require relatively lower maintenance and operating cost as compared to WIMUs-based systems. These approaches have been widely applied in human activity recognition and work-related risk factors classification in construction (De Dominicis et al., 2013; Akhavian and Behzadan, 2016; Nath et al., 2018; Ryu et al., 2019). De Dominicis et al. (2013) investigated the capability of smartphones for real-time data collection of geo-localization information for construction site managers. Akhavian and Behzadan (2016) presented an activity analysis framework for recognizing and classifying various construction workers' activities by using a smartphone's built-in accelerometer and gyroscope sensors. Their method used five different types of machine learning algorithms to recognize various types of construction activities. The results indicate that neural networks outperform other

classifiers by offering an accuracy ranging from 87% to 97% for user-dependent and 62% to 96% for user-independent categories. Nath et al. (2018) proposed a method for monitoring ergonomic risk levels caused by overexertion through body-mounted smartphones (i.e., accelerometer, linear accelerometer, and gyroscope signals). By adopting a support vector machine (SVM) classifier, the results achieved an accuracy of 90.2%. Ryu et al. (2019) examined the feasibility of the wrist-worn accelerometer-embedded activity tracker for automated action recognition during simulated masonry work in a laboratory setting. It was found that the multiclass SVM with a 4-s window size showed the best accuracy (88.1%) for classifying four different subtasks of masonry work. These machine learning classifiers have been effectively demonstrated to recognize WMSD risk factors and workers' activities, but a remaining challenge is the lack of applicable features that accurately represent the change in a worker's bodily movements caused by awkward working postures. Nevertheless, smartphones with embedded sensor-based systems by their nature are not fixed wearable sensors because of varying device locations and orientations, which can lead to data misrepresentation.

Given the above limitations, it is still crucial to deploy other automated wearable sensing systems for activity recognition and WMSDs prevention by collecting sensing data from workers on a construction site. In addition, it would be appropriate to select computational activity models that could allow software systems to conduct reasoning algorithms to infer workers' motion or movement. To do this, the current study seeks to evaluate a novel approach by using wearable insole sensor data and deep learning-based networks to automatically recognize and classify awkward working postures in construction. The next section provides more details on its feasibility and application on construction sites.

2.3. Wearable insole sensor data and deep learning-based networks for recognizing awkward working postures in construction

Automated recognition and classification of WMSD risk factors play a crucial role in mitigating WMSDs among construction workers. It could also help researchers and safety managers to retrieve important WMSD risk factor information to facilitate their analyses and decision-making support in WMSD prevention. Previous studies have extensively focused on the application of wearable insole sensor data and machine learning classifiers for recognizing and classifying loss of balance events (Antwi-Afari et al., 2018e), awkward working postures (Antwi-Afari et al., 2018f), and overexertion related construction activities (Antwi-Afari et al., 2020a). Antwi-Afari et al. (2018f) developed a non-invasive method to recognize and classify awkward working postures based on wearable insole pressure data and machine learning classifiers. The results achieved a classification accuracy of 99.7% by using the SVM, indicating the feasibility of using a wearable insole pressure system to recognize risk factors for developing WMSDs among construction workers. However, the main limitation of traditional machine learning classifiers is the fact that they treat individual dimensions of the sensor data statistically independently. Thus, each dimension of the data is converted into feature vectors without due consideration of their spatio-temporal context. To address this limitation, the current study adopted RNN-based deep learning models, which incorporate temporal dependencies of sensor data streams and are more appropriate for monitoring work-related risk factors than considering the data stream independently. Moreover, RNN-based deep learning models provide a high level of performance for time series sequential data classification, which severs as the memory units through the gradient descent steps.

Recently, deep learning networks have received great interest from the construction-related research fields because they have achieved exceptional performance in various research topics, including image classification (Yang et al., 2018; Zhong et al., 2020), object detection and recognition (Fang et al., 2018; Fang et al., 2018), natural language processing (Zhong et al., 2020), and work-related risk factors recognition (Zhang et al., 2018; Son et al., 2019; Yu et al., 2019; Kim and Cho, 2020; Lee et al., 2020; Yang et al., 2020; Zhao and Obonyo, 2020; Seo and Lee, 2021; Wang et al., 2021; Zhao and Obonyo, 2021). Son et al. (2019) presented a method to detect construction workers under varying poses against changing backgrounds in image sequences. Yu et al. (2019) analyzed a joint-level vision-based ergonomic assessment tool for construction workers (JVEC) to provide automatic and detailed ergonomic assessments of construction workers based on construction videos. The main limitation of vision-based ergonomic assessments (i.e., images and videos) is that they require a direct line of sight to register the movements in a construction environment (Han and Lee, 2013).

Kim and Cho (2020) achieved a classification performance of 82.39% to 94.73% accuracy for long-short term memory (LSTM) model than conventional machine learning classifiers. Lee et al. (2020) proposed an automatic detecting technique for excessive carrying-load (DeTECLoad) to predict load-carrying weights and postures, achieving 92.46% and 96.33% performance, respectively. Yang et al. (2020) adopted a bidirectional LSTM (Bi-LSTM) algorithm for physical load detection, and they achieved 74.6 to 98.6% accuracy. Zhao and Obonyo (2021) investigated the feasibility of deploying a convolutional long short-term memory (CLN) model under incremental learning for recognizing workers' posture and achieved 87% (personalized) and 84% (generalized) recognition performance. Wang et al. (2021) developed a novel vision-based real-

time monitoring, evaluation, and prediction method for workers' working postures. Their method achieved 87.0% accuracy of joint point recognition and 96.0% accuracy of posture risk prediction.

The abovementioned previous studies applied various deep learning networks for recognizing and classifying work-related risk factors such as physical loads and awkward working postures. Compared to traditional machine learning classifiers, deep learning-based networks considerably reduce the effort of choosing the right features by automatically extracting abstract features through several hidden layers, and they have been proven to work well with unsupervised learning (Seyfioğlu et al., 2018; Nguyen et al., 2019) and reinforcement learning (Ijjina and Chalavadi, 2017). The major limitation of these studies which hinders their application in construction is that wearable sensing data were collected by using WIMUs. It is known that attaching multiple WIMUs-based systems on workers' bodies lead to workers' discomfort and systemic instability, thus, limiting their application on construction sites (Antwi-Afari and Li, 2018g). Knowledge from these previous studies made significant contributions to automated work-related risk factors recognition for WMSD prevention, but still, there is a need to further improve the methods to prevent WMSDs in construction workers. Even though many previous studies on deep learning-based classification have been conducted, and the fact that human activity recognition, object detection and recognition, and WMSD risk recognition have widely been studied in construction, no recent study has utilized wearable insole sensor data collected from workers on construction sites as input data for recognizing and classifying awkward working postures among construction workers. To this end, the current study employs different types of deep learning networks to recognize and classify awkward working postures based on plantar pressure data collected from a wearable insole pressure system.

3. Research gaps, research objective, and contributions

Although awkward working postures remain one of the most prevalent work-related risk factors that may lead construction workers to develop WMSDs, little research has been conducted in recognizing and classifying different types of awkward working postures among construction workers. Thus, the main research question to be answered in this study is how to combine wearable insole sensor data and deep learning-based networks for recognizing and classifying different types of awkward working postures in construction. Given the above, the present study proposed a non-intrusive wearable insole sensor system for capturing plantar pressure data, and deep learning-based networks for awkward working posture recognition and classification. Therefore, the objective of this study was to recognize and classify different types of awkward working postures by using time-series wearable insole data and deep learning-based networks.

The main contributions of the present study can be summarized in two folds: (1) the feasibility of onsite experimental data collection for work-related risk factor recognition using a wearable insole pressure system. Numerous previous studies on work-related risk factor recognition are conducted by student participants in a controlled laboratory setting (Chen et al., 2017; Antwi-Afari et al., 2018f; Umer et al., 2020). These experimental conditions affect the generalization and validity of a given study. To improve the experimental design and data collection procedures, the present study analyzed wearable insole data collected from workers on construction sites for work-related risk factor recognition. Real time-series data collected from workers on construction sites are practically challenging due to the dynamic nature of the construction environment. Based on the field experiments, this study would provide a deeper insight towards validating the use of recognized awkward working postures performed by workers at the workplace; (2) occupational

awkward working posture recognition and classification. In the construction domain, traditional ergonomics risk monitoring and recognition approaches (e.g., observational methods) for mitigating WMSDs are time-consuming, unreliable, and prone to errors. The proposed work-related risk factor recognition uses time-series wearable insole data (i.e., plantar pressure patterns) and RNN-based deep learning models (e.g., LSTM, Bi-LSTM, and gated recurrent units (GRU)) for recognizing and classifying awkward working postures in construction. With this approach, workers' awkward working postures could be automatically monitored throughout the course of their work without any expert's interference or observation. In addition, this present study will add to the extant literature in this domain by utilizing both time series wearable insole sensor data and deep learning networks for practical application on construction sites. By adopting deep learning models, wearable insole data will be automatically extracted with highly representative features, containing spatio-temporal of plantar pressure patterns. Notably, this helps to enrich wearable sensor pattern data derived purely from time-series data for computational analysis and reasoning. Consequently, this proposed approach could enhance the generality and automation in construction safety management, especially for WMSD prevention.

4. Research methods

This section discusses the experimental design and data collection procedures such as recruiting participants, experimental apparatus (i.e., wearable insole pressure system), and field experiment, and plantar pressure data collection from rebar workers on construction site. It also explains the data processing and data segmentation approach by adopting the sliding window technique. Next, three RNN-based deep learning models were adopted and discussed. The final stage is model training and performance evaluation, where each RNN-based deep learning model was trained by

using plantar pressure patterns as input data and the performance of the trained models was evaluated using metrics. Fig. 1 illustrates the framework of the proposed approach. Further details are presented below.

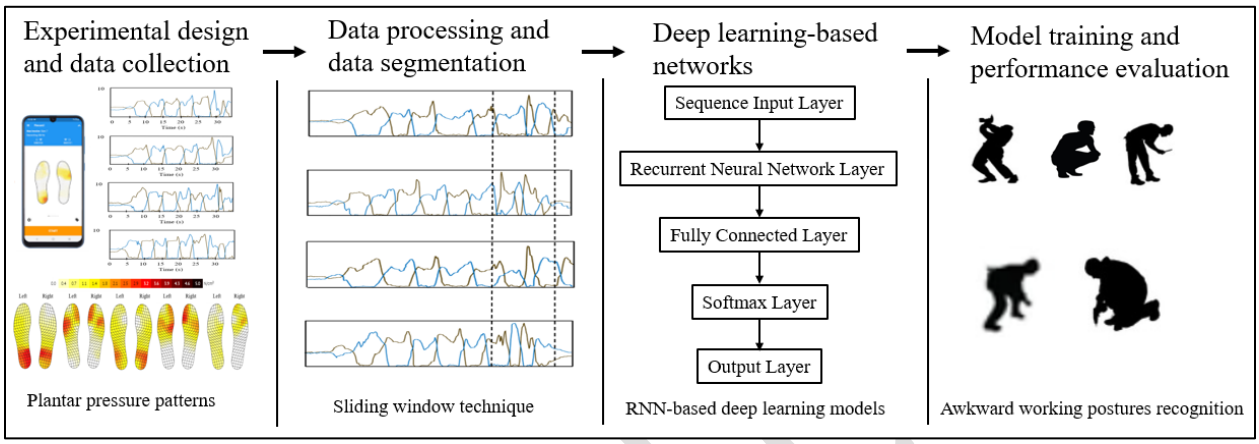

Fig. 1. A framework of the proposed approach

4.1. *Experimental design and data collection*

4.1.1. Participants

Ten male participants (i.e., construction rebar workers) were voluntarily recruited to participate in the experiments. Construction rebar workers were recruited and participated in this study because repetitive rebar tasks (e.g., preparing and assembling rebars) are physically demanding and often involve long working hours, awkward working postures, and manual lifting activities (Buchholz et al., 2003; Anwer et al., 2021). The participants mean age, weight, height, and shoe size were 38 ± 1.82 years, 76 ± 2.79 kg, 1.75 ± 0.32 m, and 10.32 ± 1.03 EU size, respectively. All participants had no history of (1) significant foot injuries or lower extremity abnormalities during the last 12 months preceding the start of the study, and (2) neurological conditions or disabilities or other conditions that affected fall and/or balance. The experimental protocol for data collection was reviewed and approved by the Institutional Review Board. In addition, a written consent was obtained from each participant after a verbal explanation of the experimental procedures.

4.1.2. Experimental apparatus

An OpenGo system (Moticon GmbH, Munich, Germany), which is a wearable insole pressure system for measuring plantar pressure distribution was used in the current study. Each left or right wearable sensor insole contains 16 capacitive pressure sensors, a 3-axis gyroscope (MEMS LSM6DSL, ST Microelectronics), and a 3-axis accelerometer. A sampling frequency of 50Hz was used for data collection. Further details of this wearable insole pressure system are presented in related studies (Antwi-Afari and Li, 2018g; Antwi-Afari et al., 2018e; Antwi-Afari et al., 2018f). Fig. 2 shows the overview of the mobile application user interface of the wearable insole system.

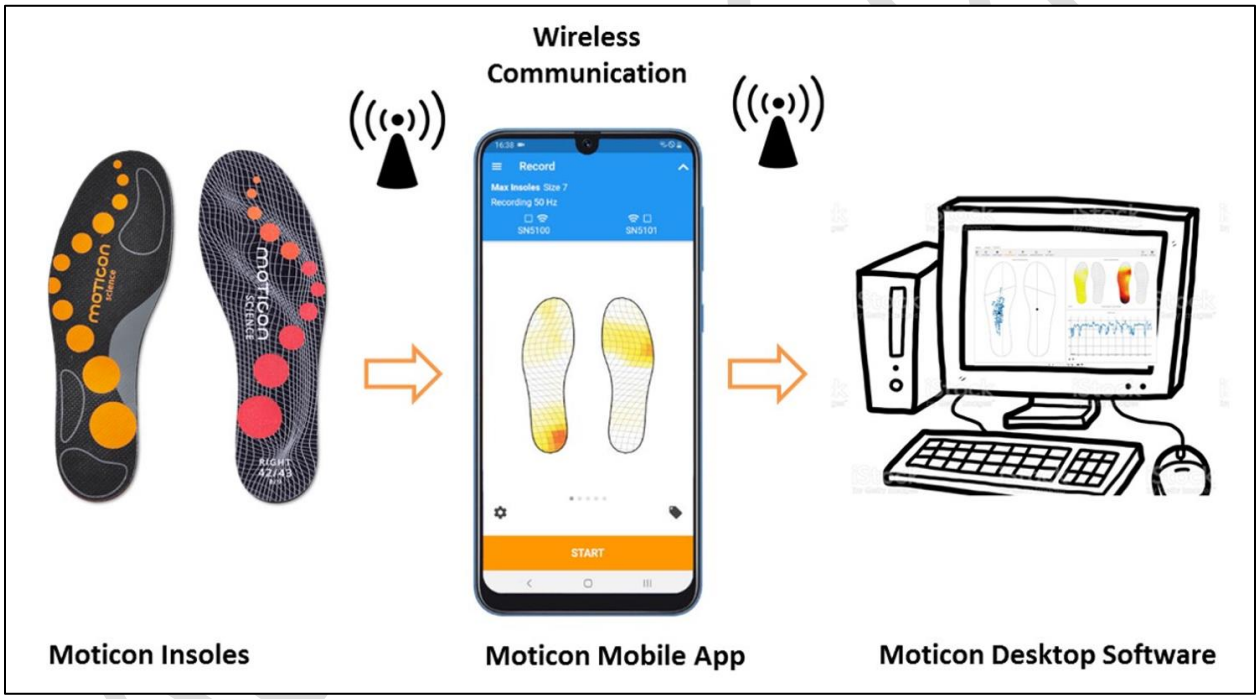

Fig. 2. Overview of the mobile application user interface of the wearable insole system

4.1.3. Field experiment and data collection

Data collection was conducted on a construction site. Participants wore a safety boot with an inserted wearable insole. Each participant was studied during daily repetitive rebar tasks such as lifting, carrying, cutting, or tying rebars. While the participants performed their daily workplace activities, only five different types of awkward working postures were observed and collected.

They mainly included overhead working, squatting, stooping, semi-squatting, and one-legged kneeling. These awkward working postures were studied because they are often used in repetitive rebar tasks and expose rebar workers to high risk of developing WMSDs (Umer et al., 2017b; Antwi-Afari et al., 2018a). Fig. 3 depicts the field experimental trials of different types of awkward working postures. In the overhead working posture, participants were captured in an upright stance while working with their hands touching a bar above their head (Fig. 3a). Squat posture was identified when the participants maintained a full squat (Fig. 3b). Stoop posture involved full trunk flexion with bilateral knee extension in standing (Fig. 3c). Semi-squat posture involved bilateral knee bending (Fig. 3d). Lastly, one-legged kneeling was seen when the participants bent either of their knees to work in a kneeling position (Fig. 3e). Each participant performed a total of 75 experimental tasks, consisting of 5 types of awkward working postures and 15 repeated experimental trials. Each experimental trial lasted for 30 seconds. Before field data collection, all participants were given sufficient time to familiarize themselves with the experimental apparatus (i.e., wearable insole pressure system) to eliminate systematic bias. The participants were also given enough rest (approx. 5 mins) between successive experimental trials to prevent injuries and physical fatigue. Notably, all experimental trials were conducted in an outdoor construction environment under natural conditions. The participants' plantar pressure data were synchronized and recorded by using a video camera for all experimental tasks. In this study, awkward working postures were defined as postures that deviated significantly from the neutral position and might cause WMSDs after being sustained for a long time (Karwowski, 2001). Moreover, it is worth mentioning that these awkward working postures exceeded the internationally recommended trunk inclination for the angles of various body parts for static working postures as defined by the International Organization for Standardization (ISO 11226:2000) (ISO, 2006).

(a) (b) (c) (d) (e)

Fig. 3. Field experiments of different types of awkward working postures: (a) Overhead working; (b) Squatting; (c) Stooping; (d) Semi-squatting; and (e) One-legged kneeling

4.2. Data processing and data segmentation

After data collection, the next stage is data processing and data segmentation. The collected data were stored in the mobile phone, and they were wirelessly transferred onto a desktop computer for data processing. For each observed awkward working posture, the participants performed 15 repeated trials. It is worth noting that the wearable insole pressure system can capture plantar pressure patterns, acceleration, angular velocity, ground reaction force, and center of pressure data. However, all the collected data except plantar pressure patterns data were removed from the dataset during data processing. As such, only plantar pressure patterns were labelled and used for data segmentation. Class labelling was conducted by using the recorded videos and the collected plantar pressure data. The signals were visually inspected for noise or signal artefacts. Since plantar pressure patterns were evenly distributed and didn't cause any unrelated changes to different types of awkward working postures, no further signal artefacts were conducted during data processing.

In the data segmentation stage, a sliding window technique was adopted to divide plantar pressure data into smaller segments, each segment containing a specified number of data samples (Preece et al., 2009). The purpose of this stage is to obtain labeled segments from the continuous stream

of wearable insole data to evaluate the performance of the deep learning networks. Since the sampling frequency for data collection was 50 Hz, 50 data samples are obtained every second for data processing. Given the experimental conditions, the dataset contains 10 participants with 1,125,000 data samples of five classes. By considering the conducted experiments which involved repetitive rebar tasks, a window size of 5.12 s, which represents 256 (2^8) was suitable for dividing plantar pressure data into smaller segments. This window size data segment was chosen by initially analyzing the collected plantar pressure data to include representative awkward working postures in order to optimize the recognition performance. To prevent missing relevant data, an overlapping of consecutive windows was conducted. A 50% overlap of adjacent data segment lengths was used as demonstrated in previous studies (Antwi-Afari et al., 2018e; Antwi-Afari et al., 2018f).

4.3. Deep learning-based networks

4.3.1. Recurrent neural network (RNN) model architectures

RNN is a subset of deep learning-based networks on the principle of extracting the output layer and feeding it back as the input of another layer to predict the output of the current layer (Inoue et al., 2018). Fig. 4 represents an overview of the RNN model architecture. As shown in Fig. 4a, the basic architecture of an RNN consists of an input, output, activation function, and a recurrent loop. Fig. 4b illustrates the structure of an unfolded RNN into a full network that allows it to perform a sequence of input data. Generally, RNN model receives the input x_0 from the sequence of input data, performs some calculations resulting in h_0, which, together with x_1, compose the input to the next step. Similarly, the output h_1 with the input x_2 will be the input to the next step, and so on. It is worth noting that y_t is the same as h_t.

The value of h_t is calculated using Equation 1. As illustrated in Equation 1, the input x_t is modified by W and h_{t-1} is modified by U.

$$h_t = \sigma(Wx_t + Uh_{t-1}) \quad (1)$$

Where, x_t represents the input of the structure at time step t, h_t, is the output of the structure at time step t, W is the weight matrix of the input to the hidden layer at time t, U is the weight matrix of the hidden layer at time $t-1$, and σ represents the activation function.

Like other neural network structures, RNN models learn weights (W, U) through training using the backpropagation technique. The network then determines the accuracy of the model by using an error function (loss function) and calculating the derivates of the loss function with respect to the weight. In addition, the network uses an activation function to simplify the mathematical calculations related to the application of backpropagation. In the following section, this study presents three types of RNN-based deep learning models that were used for classifying different types of awkward working postures.

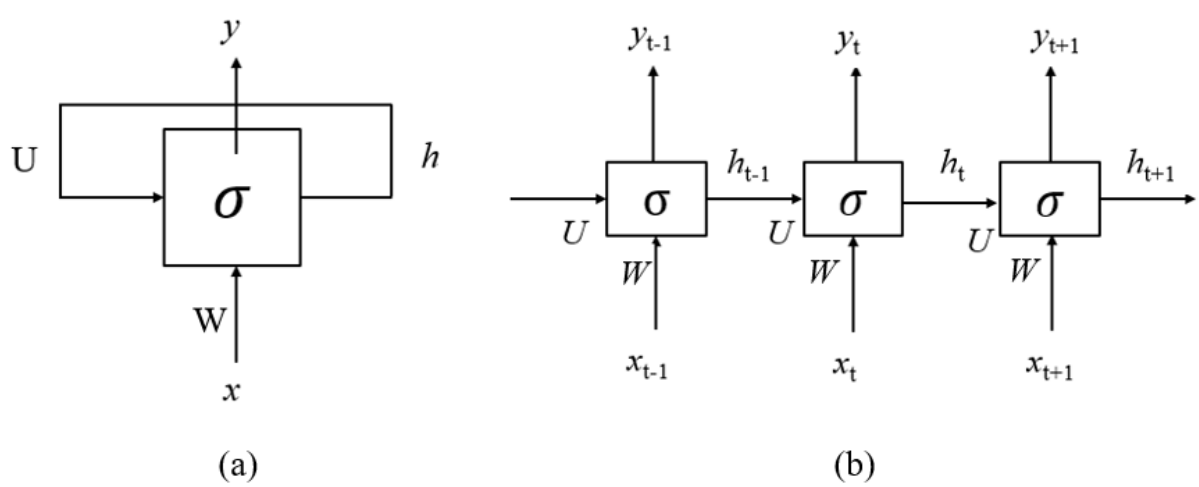

Fig. 4. An overview of the RNN model architecture: (a) The basic architecture of an RNN; and (b) The structure of an unfolded RNN

4.3.1.1. Long-short term memory (LSTM)

LSTM is a type of RNN model with an enhanced function to calculate hidden states. Hochreiter and Schmidhuber (1997) proposed LSTM network to solve temporal sequences and long-term dependency problems by adding the gating mechanism. Compared to traditional RNN models, LSTM network can solve the vanishing and exploding gradient problems because it extends RNN with memory cells which can ease the learning of temporal relationships on long time scales.

Fig. 5 shows LSTM cell architecture. This cell determines which data to keep in memory and which data to ignore using the concept of gating. LSTM cell has three gates, namely, input, forget, and output gates. These gates can be seen as write (deciding what new information should be kept in memory by the input gate), reset (deciding what information should be forgotten by the forget gate), and read (deciding what information should be output by the output gate) operations for the cells. LSTM cell state is the key component that carries the information between each LSTM cell. Modifications to the cell state are controlled by the three gates mentioned above. The first stage of the LSTM cell architecture is the forget gate, which is responsible for specifying which data to remember and which data to erase. This decision is made through the sigmoid layer as shown in Equation 2.

$$f_t = \sigma\left(x_t W^f + h_{t-1} U^f + b_f\right) \tag{2}$$

The output is 0 or 1, where 0 means forget, and 1 means keep. The second stage is the input gate, which decides which information to be stored or added to the cell state. The input gate also consists of another sigmoid layer that is used to determine new candidate values that could be updated to the cell state, as shown in Equation 3.

$$i_t = \sigma\left(x_t W^i + h_{t-1} U^i + b_i\right) \tag{3}$$

The next stage in LSTM is the memory update, where the old cell is updated to the new cell. The *tanh* function creates a vector of candidate values that could be added to the state as shown in Equation 4.

$$\hat{C}_t = \tanh(x_t W^g + h_{t-1} U^g + b_c) \tag{4}$$

The cell state is then ready for the update by concatenating both f_t and $\hat{C}_t$. LSTM updates the old cell state $C_{t-1}$to be $C_t$as shown in Equation 5.

$$C_t = \sigma\left(f_t \times C_{t-1} + i_t \times \hat{C}_t\right) \tag{5}$$

The final stage of LSTM is the *output* gate, which uses a sigmoid function to determine which part of the cell state will come out as shown in Equation 6.

$$o_t = \sigma(x_t W^o + h_{t-1} U^o + b_o) \tag{6}$$

In Equation 7, by multiplying o_t with tanh (C_t), we implicitly determine which part to take out.

$$h_t = \tanh(C_t) \times o_t \tag{7}$$

Where, i_t, f_t, and o_t are the input, forget, and output gates, respectively. W^i, W^f, and $W^o$are the weights for the input, forget, and output gates at time step *t*, respectively. $W^g$is the weight for the candidate layer. U^i, U^f, and $U^o$are the weights for the input, forget, and output gates at time step *t-1*. $U^g$is the weight for the candidate layer. $x_t$is the input at current time step *t*. h_t *and* $h_{t-1}$are the output of the cell at current time step *t* and previous time step *t-1*, respectively. C_t and $C_{t-1}$are the cell states at time steps *t* and *t-1*, respectively. b_i, b_f, and $b_o$are the biases for the input, forget, and output gates, respectively. b_c is the bias for the candidate layer, and σ is the sigmoid function.

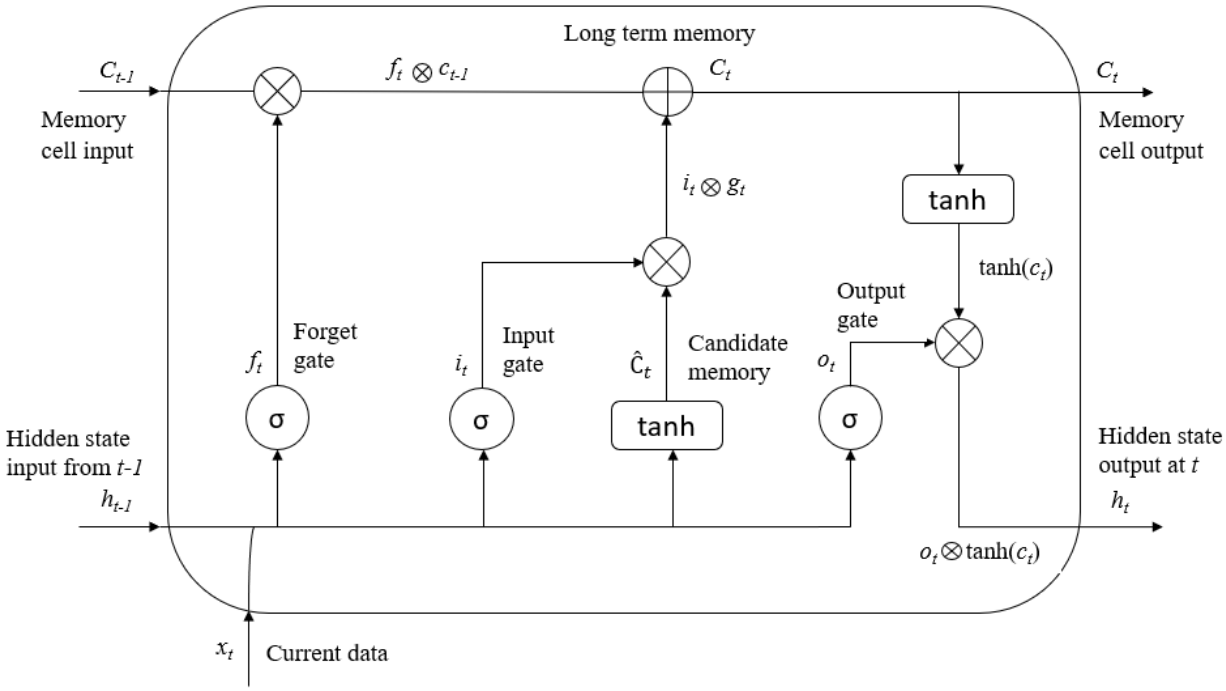

Fig. 5. LSTM cell architecture

4.3.1.2. Bidirectional LSTM (Bi-LSTM)

Fig. 6 depicts the Bi-LSTM layer structure, where the two independent layers share the same input sequence while the outputs from the two layers are concatenated and represented in the sequence. Bi-LSTM model consists of two separate layers that divide the state neurons of a regular LSTM into a forward layer, which is responsible for positive time direction, and a backward layer, which is responsible for negative time direction. The outputs of the forward and backward layers are concatenated, which make it possible to obtain the forward and backward information at each time step in the sequence. This approach enhances the learning process due to the dependency found between the neighboring data pairs.

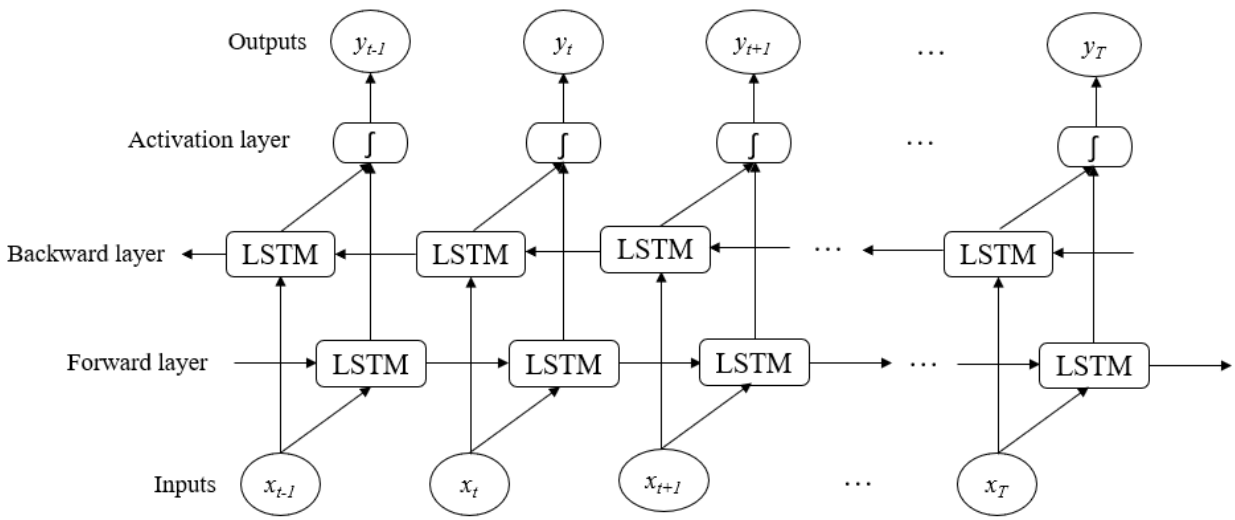

Fig. 6. Bi-LSTM layer structure

4.3.1.3. Gated recurrent units (GRU)

GRU is an improved version of the standard RNN and a simplified version of LSTM (Gers et al. 2002). Like LSTM, GRU is designed to reset or update its memory adaptively. Hence, GRU has a reset gate and an update gate, which are identical to the forget and the input gates in LSTM. Fig. 7 represents the GRU cell architecture, which is like the LSTM structure but with fewer parameters that enable it to capture long-term dependencies more easily. The update gate monitors the amount of memory content that must be forgotten from the previous time step.

The operation of a GRU cell can be described as follows:

$$z_t = \sigma(W_z \cdot [h_{t-1}, x_t] + b_z) \tag{8}$$

The model uses the reset gate to decide the amount of past information to forget as given in Equation 9.

$$r_t = \sigma(W_r \cdot [h_{t-1}, x_t] + b_r) \tag{9}$$

New memory content is introduced by using the reset gate as calculated in Equation 9 and relevant past information is stored as shown in Equation 10.

$$\hat{h}_t = \tanh(W \cdot [r_t \times h_{t-1}, x_t] + b_h) \quad (10)$$

Finally, the network calculates the hidden state h_t, which is a vector that carries information for the current unit and passes it down to the network. Thus, the update gate is essential since it decides what is needed from the current memory content $\hat{h}_t$ and the previous step h_{t-1}. Equation 11 calculates the value of h_t.

$$h_t = (1 - z_t) \times h_{t-1} + z_t \times \hat{h}_t \quad (11)$$

Where, z_t and $r_t$are the output of the update and reset gates. W_z and W_r are the weights for the update and reset gates. b_z and b_r are the biases for the update and reset gates. h_t and h_{t-1} are the output of the cell at the current time step *t* and previous time step *t-1*, respectively. x_t is the input at the current time step *t*, and σ is the sigmoid function.

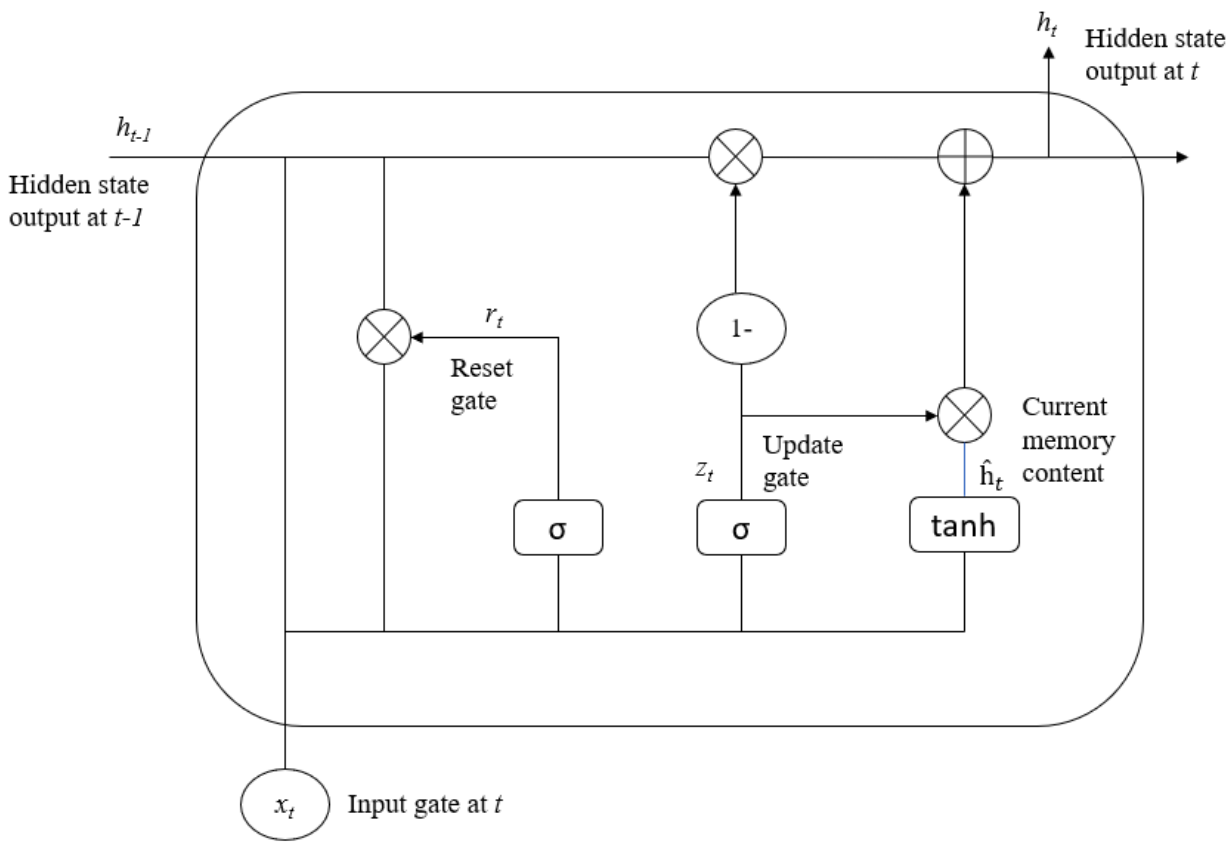

Fig. 7. GRU cell architecture

4.4. Deep learning model training and performance evaluation

During the deep learning model training, all RNN-based deep learning models (i.e., LSTM, Bi-LSTM, and GRU) have been designed to receive the same input data. Each class label belongs to the same participant from plantar pressure data. For each experimental task, the plantar pressure data vector has a dimensionality of 32 vectors (2 × 16 pressure sensors for each foot) × 256 data samples. The total number of data samples is 4,394 values. Since each window size contains 256 data samples, the current study used input data of 1,124,864 data samples. The network models are three layers deep, and the number of hidden units ranges from 100 to 500 for each deep learning model. A previous study used a similar architecture, with 200 hidden units per layer (Alawneh et al., 2021). In this study, we used the cross-entropy loss (log loss function) as a cost function for model accuracy. The loss function determines the model's accuracy in the classification problem. The smaller the loss value, the more accurate the actual value. Updating the weights and biases in the model is the responsibility of the optimization function. In addition to the Adam optimization function, an adaptive version of the stochastic gradient descent was used for model training (Kingma and Ba, 2014). The Adam optimizer is a reliable optimizer that ensures fast and accurate results when updating the network parameters. To prevent overfitting in the model, this study applied the widely used stochastic regularization method known as the dropout technique (Srivastava et al., 2014). Overfitting arises when the loss function is very small for training data while it is very large for testing data. The main objective of the dropout technique is to prevent the neurons in the network from excessive co-adapting, which results in a lack of model generalization. The model evaluation process is performed by dividing the dataset into training and testing datasets, thus, 90% for training and the remaining 10% for testing. The training dataset was further split into two datasets (80% for training and 20% for validation). The validation dataset was used for

hyper-parameter tuning and to determine the optimal unit numbers of the RNN-based deep learning models. The 10-folds cross-validation technique was adopted to test the classification performance of RNN-based deep learning models, similar to previous studies utilizing deep learning networks (Kim and Cho, 2020; Yang et al., 2020). By conducting 10-folds cross-validation, the best hyper-parameters can be selected, and the RNN-based deep learning models can be evaluated as generalized models that show the desired classification performance with an unseen dataset. The parameters values based on the model that provided the best accuracy with the lowest training time were selected. The results show that our tuning process achieved the best accuracy for the datasets when setting the values of the epoch, dropout, batch size, learning rate, and hidden units at 100, 0.5, 64, 0.001, and 200, respectively. The experiments were conducted and trained on a computer 2.60 GHz Intel (R) Core (TM) i7-9750H CPU, 16GB RAM, 64-bit operating system, Windows 10 Pro, and Intel Iris Plus Graphics 650 1536MB GPU using MATLAB R2020b. The detailed dataset and tuned hyper-parameters of the proposed RNN-based deep learning models are shown in Table 1.

Table 1. Dataset and hyper-parameters of the proposed RNN-based deep learning models

Dataset and hyper-parameters	**Value**
Number of classes	5
Number of plantar pressure sensors	32 capacitive pressure sensors
Window size	5.12 s
Overlap of adjacent windows	50%
Sampling rate	50 Hz
Epoch	100
Dropout	0.5
Batch size	64
Learning rate	0.001
Hidden units	200
Number of sample data	1,125,000 data samples

In performance evaluation and classification, the performance of the three types of RNN-based deep learning models was assessed by using evaluation metrics such as accuracy, precision, recall,

specificity, and F1-score (Attal et al. 2015). Equations 12 to 16 show how each evaluation metric is calculated. Accuracy is the most standard metric to summarize the overall classification performance for all classes. It is defined as the ratio of correctly classified instances to the total number of instances. Precision is the measure of determining how many instances classified as positive are actually positive, thus, it is a measure of exactness. It is defined as the ratio of correctly classified positive instances to the total number of instances classified as positive. Recall or sensitivity is the number of positive instances correctly classified as positive, thus, it is a measure of correctness. It is defined as the ratio of correctly classified positive instances to the total number of positive instances. Specificity is the number of negative instances correctly classified as negative. It is defined as the ratio of correctly classified negative instances to the total number of instances classified as negative. The F1-score combines precision and recall into a single value, and it is used to measure the performance of the classification model by avoiding systematic bias (Ordóñez and Roggen, 2016). Besides these evaluation metrics, the performance of each model on individual classes was assessed using a confusion matrix, while the accuracy and loss curves were drawn for the best model.

$$Accuracy = \frac{TP + TN}{TP + TN + FP + FN} \tag{12}$$

$$Prcision = \frac{TP}{TP + FP} \tag{13}$$

$$Recall = \frac{TP}{TP + FN} \tag{14}$$

$$Specificity = \frac{TN}{TN + FP} \tag{15}$$

$$F1 - score = 2 \times \frac{Precision \times Recall}{Precision + Recall} \tag{16}$$

Where, True Positive (TP) is the number of positive instances that were classified as positive, True Negative (TN) is the number of negative instances that were classified as negative, False Positive (FP) is the number of negative instances that were classified as positive, and False Negatives (FN) is the number of positive instances that were classified as negative.

5. **Results**

This section presents the results derived from the conducted experimental design and data collection procedures. Table 2 shows the classification accuracy and training time for different types of RNN-based deep learning models which were evaluated by 10-folds cross-validation. The classification accuracy for all three RNN-based deep learning models was greater than 97%. As indicated in Table 2, the classification accuracies were 97.99%, 98.33%, and 99.01% for LSTM, Bi-LSTM, and GRU, respectively. The results revealed that GRU model achieved the highest performance among all tested RNN-based deep learning models in terms of training plantar pressure pattern data for classifying different types of awkward working postures. On the other hand, when the performance of the three types of RNN-based deep learning models was evaluated in terms of training time, the average duration of LSTM, Bi-LSTM, and GRU networks lasted 31 mins, 56 mins, and 54 mins, respectively. The results show that Bi-LSTM network requires more training time than either LSTM or GRU models.

Table 2. Classification accuracy and training time for RNN-based deep learning models

RNN-based deep learning models	Accuracy (%)	Training time (minutes)
Long-short term memory (LSTM)	97.99	31
Bidirectional LSTM (Bi-LSTM)	98.33	56
Gated recurrent units (GRU)	99.01	54

The confusion matrix and evaluation metrics for LSTM model are presented in Table 3. Generally, the evaluation metrics achieved high performance of LSTM model on the plantar pressure data for

classifying different types of awkward working postures. In terms of precision metric, LSTM model achieved classification performance values between 88.30% and 99.82%. The highest instance of correct classified awkward working posture was overhead working posture, representing 98.74%. Conversely, stooping posture had little impact on the LSTM model (i.e., 67.48%) among the different types of awkward working postures. The values of specificity and F1-score metrics are in the range of 95.33% to 99.94%, and 76.50% to 98.40%, respectively. To identify the classes that are misclassified or confused with other classes, the confusion matrix was presented. As shown in Table 3, each row represents the actual classes, while the columns represent the predicted classes. The diagonal cells represent the correct instances as highlighted in bold font for a more detailed evaluation of the classification performance at the end of the 100th epoch. The other cells show the misclassified instances. From Table 3, it was revealed that overhead working posture class had the best recognition performance because plantar pressure data are different from the values in other classes. It can also be seen that the top two most misclassified classes are stooping and overhead working postures. Stooping posture is confused 30 times with overhead working posture. Data collection for both stooping and overhead working postures involved bilateral knee extension in static positions. As such, the confusion between stooping and overhead working postures can be explained by the similar plantar pressure data collected from the wearable insole system.

Table 3. Confusion matrix and evaluation metrics for long-short term memory (LSTM)

		Predicted class				
True class	Overhead working	**625**	0	5	3	0
	Squatting	10	**350**	4	3	1
	Stooping	30	4	**83**	6	0
	Semi-squatting	23	0	2	**433**	0
	One-legged kneeling	8	0	0	9	**533**
		Overhead working	Squatting	Stooping	Semi-squatting	One-legged kneeling
Accuracy						97.99%
Precision		89.80%	98.87%	88.30%	95.37%	99.82%
Recall		98.74%	95.11%	67.48%	94.54%	97.02%
Specificity		95.33%	99.78%	99.46%	98.76%	99.94%
F1-score		94.06%	96.95%	76.50%	94.96%	98.40%

Table 4 represents the confusion matrix and evaluation metrics of Bi-LSTM model. The correct classes are shown in bold for a more detailed evaluation of the classification performance at the end of the 100th epoch. Generally, the evaluation metrics of Bi-LSTM model achieved higher performance than LSTM model. With regards to precision metric, Bi-LSTM model achieved performance rates between 92.09% and 99.61%. Like LSTM model, the highest instance of Bi-LSTM for correct classified awkward working posture was overhead working, representing 97.83%. It was reported that overhead working posture had the most positive impact on the performance of Bi-LSTM, followed by one-legged kneeling (97.80%), squatting (96.37%), semi-squatting (93.02%), and stooping (87.50%) (Table 4). The specificity and F1-score metrics of different types of awkward working postures range from 96.03% to 99.88% and 91.70% to 98.75%, respectively. According to the confusion matrix in Table 4, it can be observed that overhead working posture is the most recognized class with 675 positive instances. In addition, it was found that the top two most misclassified classes are stooping and overhead working postures (Table 4).

Table 4. Confusion matrix and evaluation metrics for bidirectional LSTM (Bi-LSTM)

		Predicted class				
True class	Overhead working	**675**	0	8	5	2
	Squatting	8	**425**	0	8	0
	Stooping	25	2	**210**	3	0
	Semi-squatting	18	0	0	**240**	0
	One-legged kneeling	7	0	0	4	**512**
		Overhead working	Squatting	Stooping	Semi-squatting	One-legged kneeling
Accuracy						98.33%
Precision		92.09%	99.53%	96.33%	92.31%	99.61%
Recall		97.83%	96.37%	87.50%	93.02%	97.80%
Specificity		96.03%	99.88%	99.58%	98.94%	99.88%
F1-score		94.87%	97.93%	91.70%	92.66%	98.75%

The confusion matrix and evaluation metrics of GRU model are presented in Table 5 with correct classes shown in bold for a more detailed evaluation of the classification performance at the end of the 100th epoch. The evaluation metrics of GRU model achieved the highest performance compared to either LSTM or Bi-LSTM model. Regarding precision metric, GRU model achieved classification performance values between 94.41% and 99.80%. The highest instance of correct classified awkward working posture was overhead working, representing 99.30%. This recall result concurs with classification accuracy, thus, indicating that GRU model outperforms other RNN-based deep learning models. It was found that stooping posture had the lowest correct classified posture (i.e., 89.00%) among the different types of awkward working postures. The specificity and F1-score metrics of different types of awkward working postures range from 97.08% to 99.94% and 93.19% to 99.39%, respectively. Taken together, these results show that GRU model outperformed either LSTM or Bi-LSTM model based on plantar pressure data for classifying different types of awkward working postures. Like LSTM and Bi-LSTM models, it can be observed from the confusion matrix in Table 5 that overhead working posture is the most

recognized class with 710 positive instances. Moreover, it was reported that stooping and overhead working postures are the top two most misclassified classes (Table 5).

Table 5. Confusion matrix and evaluation metrics for gated recurrent units (GRU)

		Predicted class				
True class	Overhead working	**710**	0	4	1	0
	Squatting	5	**412**	0	3	0
	Stooping	21	1	**178**	0	0
	Semi-squatting	12	0	0	**310**	1
	One-legged kneeling	4	0	0	1	**489**
		Overhead working	Squatting	Stooping	Semi-squatting	One-legged kneeling
Accuracy						99.01%
Precision		94.41%	99.76%	97.80%	98.41%	99.80%
Recall		99.30%	98.10%	89.00%	95.98%	98.99%
Specificity		97.08%	99.94%	99.80%	99.73%	99.94%
F1-score		96.80%	98.92%	93.19%	97.18%	99.39%

Fig. 8 and 9 show the accuracies and losses over iterations curves with the tuned hyperparameters of the GRU model. As shown in both figures, GRU model performance shows an increase in accuracy and decrease in loss in both training and validation, respectively. In other words, the training and validation curves for GRU model converge at higher accuracy whilst their corresponding loss curves converge at a lower loss value. It was found that both the accuracies and losses were converged at the 90th epoch. Thus, the difference between either training accuracy and validation accuracy or training loss and validation loss was insignificant, indicating that the GRU model was effectively trained without overfitting plantar pressure data.

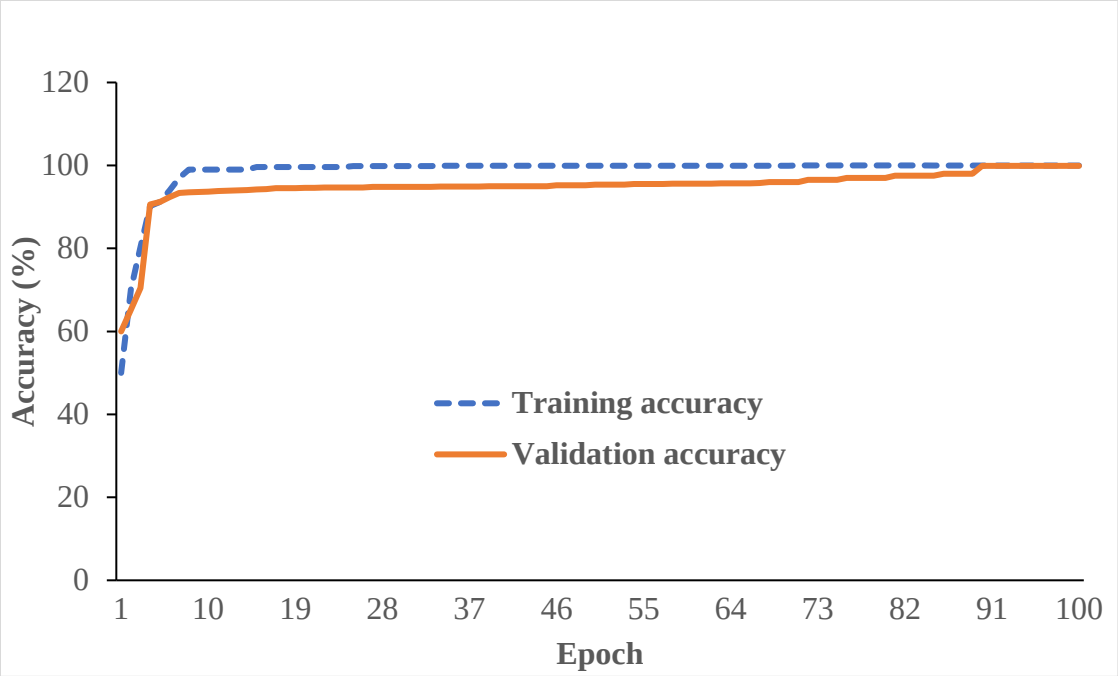

Fig. 8. Accuracies over iterations curves with the tuned hyperparameters of the GRU model

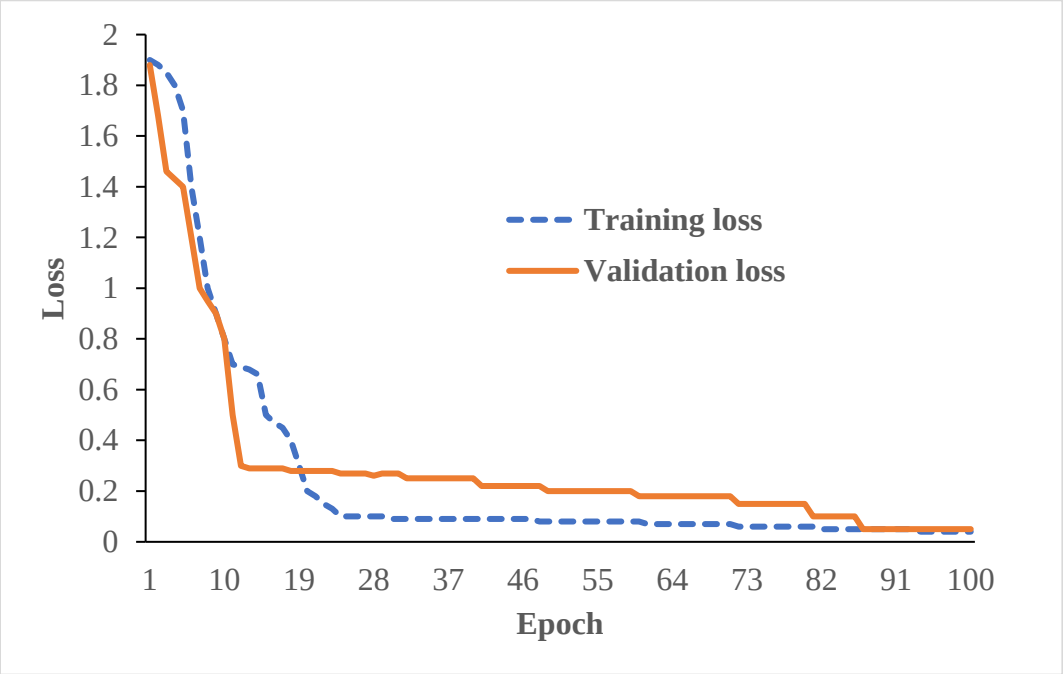

Fig. 9. Losses over iterations curves with the tuned hyperparameters of the GRU model

6. **Discussion**

6.1. Wearable sensing data and deep learning-based networks

Construction activities are associated with several work-related risk factors. Among them, awkward working postures are the major risk factor that causes WMSDs in construction. The objective of this research was to evaluate a novel approach of using deep learning-based networks and wearable insole sensor data to automatically recognize and classify different types of awkward working postures in construction. To do this, this study adopted three types of RNN-based deep learning models to train time-series plantar pressure data captured by a wearable insole system.

By comparing the employed RNN-based deep learning models in this study, it was found that GRU model achieved the highest accuracy (i.e., 99.01%) with an average training duration of 54 minutes. In addition, the results show that GRU model obtained precision, recall, specificity, and F1-score metrics of 94.41% to 99.80%, 89.00% to 99.30%, 97.08% to 99.94%, and 93.19% to 99.39%, respectively in classifying different types of awkward working postures. Regarding the confusion matrix, it was revealed that the top two most misclassified classes are stooping and overhead working postures. Moreover, GRU model performance shows an increase in accuracy and a decrease in loss in both training and validation, respectively. These results support the hypothesis of this study that GRU model, which is an RNN-based deep learning network could provide a reliable and better performance accuracy for classifying different types of awkward working postures. This finding might be explained from the model perspective. GRU model is relatively simpler and can forget and choose memory with fewer parameters, while LSTM model needs more gating and parameters to complete similar tasks. In addition, GRU model can control the information flow from the previous activation when computing new candidate activation. In

summary, GRU model outperformed other RNN-based deep learning models in this study in terms of computational power (i.e., convergence of training time) and performance (i.e., parameter updates). Our results are comparable to other previous studies which found GRU model to outperform LSTM model (Yang et al., 2020; Zarzycki and Ławryńczuk, 2021). The findings of this study indicate that GRU architecture can leverage the advantages of both LSTM and Bi-LSTM layer architectures to enhance awkward posture recognition. Hence, the use of the GRU model is recommended for classifying awkward working postures based on wearable insole data.

A previous study by Antwi-Afari et al. (2018f) utilized plantar pressure data to recognize different types of awkward working postures based on machine learning classifiers, finding an accuracy of 99.70% with SVM classifier at 0.32s window size. However, this previous work was conducted in a controlled laboratory setting, by student participants, and static awkward working postures. These experimental conditions are not the case in a real-world construction environment. By utilizing WIMU-based systems, Lee et al. (2020) compared a deep learning network (i.e., CNN-LSTM) to conventional machine learning classifiers for automated classification of squat postures. They obtained 75.4% and 91.7% classification performance for conventional machine learning and deep learning model, respectively. Although these results are comparable to the current study, Lee et al. (2020) used acceleration and angular velocity data while the present study used plantar pressure data captured by a wearable insole system.

Notably, previous studies have also demonstrated similar deep learning networks (e.g., vanilla, unidirectional LSTM, Bi-LSTM, GRU) in wearable sensor-based human activity recognition studies in construction (Rashid and Louis, 2019; Kim and Cho, 2020; Lee et al., 2020; Yang et al.,

2020; Zhao and Obonyo, 2021) and other disciplines (Li et al., 2019; Alawneh et al., 2021; Mekruksavanich and Jitpattanakul, 2021). Rashid and Louis (2019) evaluated a data-augmentation framework for identifying construction equipment activity by combining LSTM model and multiple WIMU-based systems. They found that LSTM model outperforms conventional machine learning classifier (i.e., artificial neural network). Kim and Cho (2020) proposed a construction worker's motion recognition model using the LSTM network based on an evaluation of the number and location of WIMUs to maximize motion recognition performance. They found that the proposed approach could improve a worker monitoring mechanism for safety and productive management. Yang et al. (2020) investigated the feasibility of identifying various physical loading conditions by analyzing a worker's bodily movements collected by using WIMUs. Their findings contribute to automated work-related risk recognition and WMSDs prevention, thus, enhancing workers' health and safety at construction workplace. Zhao and Obonyo (2020) investigated the feasibility of integrating convolutional neural networks (CNN) with LSTM layers for recognizing construction workers' postures from motion captured by WIMUs-based systems. The results revealed that the proposed deep neural network approach has a high potential in addressing challenges for improving posture recognition performance than conventional machine learning models. Alawneh et al. (2021) compared the performance of data augmentation and RNN-based deep learning models on three open-source datasets, finding that GRU models and data augmentation significantly enhance activity recognition. Collectively, these studies found that deep learning models and wearable sensing data can be utilized for monitoring workers' activities regarding their safety, fall risks, and productivity. However, direct comparison between existing studies' findings and the current study may not be meaningful due to numerous differences in experimental design (e.g., participants' physical characteristics) and data collection procedures.

6.2. Study implications, practical applications, and contributions

The current study provides relevant findings and practical implications to both researchers and practitioners within the construction industry. First, a key practical implication is the feasibility of onsite experimental data collection for work-related risk factor recognition using a wearable insole pressure system. Collecting wearable sensing data in a real-world construction setting is very challenging due to multiple reasons such as the dynamic nature of the construction environment, huge resources, and several work-related risk factors. Different from previous studies on work-related risk factor recognition that were conducted by student participants in a controlled laboratory setting (Chen et al., 2017; Antwi-Afari et al., 2018f; Umer et al., 2020), the current study investigated the use of wearable insole data while construction rebar workers performed awkward working postures during repetitive rebar tasks at construction site. Awkward working postures are also commonly performed by other workers such as masons, carpenters in the construction industry. Collectively, the proposed approach could not only be applied during repetitive rebar tasks (e.g., preparing and assembling rebars), but also other manual repetitive handling tasks (e.g., bricklaying) in construction. Second, the proposed approach provides an automated recognition and classification of awkward working postures in construction. The results from the current study revealed that awkward working postures, the most prevalent work-related risk factor among construction workers, could be recognized and classified by using wearable insole data and deep learning networks. Awkward posture recognition is the first step in proactive WMSD prevention. As such, this wearable sensor-based approach can serve as a proactive intervention tool for recognizing work-related risk factors, thus, mitigating WMSDs risks in construction. Besides automated WMSDs risk monitoring and recognition in construction, the achieved awkward posture recognition model can also facilitate "Prevention through Design" (PtD)

practices by identifying workers' ergonomic risks under different workplace designs. These preventive strategies can also be adopted in other physically demanding and labor-intensive occupations such as manufacturing, automobile, and agriculture. Third, the proposed approach—utilizing wearable insole data and deep learning-based networks—will contribute to real-time wearable sensor computing by deploying the performance of plantar pressure patterns and GRU model for awkward posture recognition. Construction practitioners (e.g., safety managers) can use this piece of information to enhance their safety program, thus, improving workers' safety and health. With the performance accuracies of three RNN-based deep learning models in this study, the best RNN-based deep learning model (i.e., GRU) can learn workers' movement patterns and provide reliable results for predicting posture-based WMSDs risk. However, it was found that stooping and overhead working postures were misclassified and could lead to recognition errors. Nevertheless, the findings of this study can be applied to other work-related risk factors (e.g., overexertion, loss of balance events) with specific physical load conditions and reasonable hyper-parameter tuning through model training and testing, thus, mitigating the risk of developing WMSDs.

6.3. Limitations and future research directions

The proposed approach is successful for automated recognition and classification of awkward working postures in construction. However, there are few limitations and challenges. First, this study only investigated a small sample of experienced rebar workers and five types of awkward working postures in construction. With diverse construction workers and physically demanding construction activities, the small experimental dataset could limit the application of the proposed approach in the construction industry. Future studies should collect large samples of data from

several construction workers (e.g., bricklayers, carpenters) while conducting other types of awkward working postures (e.g., bending or twisting to lift an object) during a real-world construction environment. Such dataset with enough samples is crucial in training, testing, and developing a generalized model for different construction activities. Second, this study considered limited types of wearable sensor data—plantar pressure data—for automated recognition of awkward working posture. Notably, there are other types of body sensor networks or wearable biosensors for collecting heart rate, respiration, and body temperature data could be integrated to enhance automated monitoring and recognition applications. As such, future research should include other types of biosensor data. Third, the current study employed only three types of RNN-based deep learning models for awkward posture recognition and classification. Although useful, RNN-based deep learning models are specifically designed to handle sequential data, but they suffer from the vanishing/exploding gradient problem. As a result, RNNs fail to deal with long sequences if *tanh* is applied as the activation function, whereas the model is unstable if a rectified linear unit (*relu*) is used (Dang et al., 2020). In addition, RNN layers cannot be stacked into a very deep model because the saturated activation functions cause the gradient to decay over layers. Consequently, future research could evaluate other types of deep learning networks (e.g., CNN) or integrate two or more deep learning networks (e.g., CNN-LSTM) for awkward posture recognition.

7. Conclusions

This research evaluates a novel approach of using deep learning-based networks and wearable insole sensor data to automatically recognize and classify different types of awkward working postures in construction, which may lead workers to develop WMSDs. Five different types of

awkward working postures (i.e., overhead working, squatting, stooping, semi-squatting, and one-legged kneeling) were conducted, and plantar pressure data were captured by using a wearable insole pressure system. The classification performance of three RNN-based deep learning models—LSTM, Bi-LSTM, and GRU— was evaluated using metrics such as accuracy, precision, recall, specificity, and F1-score. The experimental results show that GRU model outperforms the other RNN-based deep learning models with a high accuracy of 99.01% and F1-score between 93.19% and 99.39%. These results suggest that GRU model, widely applied for the classification of time-series and sequential data, can be employed to learn sequential plantar pressure patterns captured by a wearable insole system to recognize and classify different types of awkward working postures. The proposed approach will contribute to real-time wearable insole sensor computing by deploying the performance of GRU model for awkward working posture recognition on construction sites. In addition, it contributes to automated WMSDs risk recognition among construction workers by enabling safety managers to continuously monitor awkward working postures, thus improving workers' safety and health conditions. To develop a detailed practical guideline for this application, future research could integrate other types of wearable biosensors (e.g., heart rate monitors) and deep learning networks (e.g., CNN) for vigorous recognition of awkward working postures.

Data availability statement

The datasets used in this study are available from the corresponding author upon request.

Declaration of competing interest

None

Acknowledgement

The authors acknowledged supports from (1) Aston Institute for Urban Technology and the Environment (ASTUTE), Seedcorn Grants Proposal 2020/21 entitled "Wearable Insole Sensor Data and a Deep Learning Network-Based Recognition for Musculoskeletal Disorders Prevention in Construction" and (2) Aston Research and Knowledge Exchange Pump Priming Fund 2021/22 on a Grant Proposal entitled "Digital Twin-Enabled Wearable Sensing Technologies for Improved Workers' Activity Recognition and Work-Related Risk Assessment". Special thanks to all our participants involved in this study.

References

Akhavian, R., and Behzadan, A. H. (2016) Smartphone-based construction workers' activity recognition and classification. Automation in Construction, Vol. 71, No. 2, pp. 198–209. DOI: https://doi.org/10.1016/j.autcon.2016.08.015.

Alawneh, L., Alsarhan, T., Al-Zinati, M., Al-Ayyoub, M., Jararweh, Y., and Lu, H. (2021) Enhancing human activity recognition using deep learning and time series augmented data. Journal of Ambient Intelligence and Humanized Computing, pp. 1-16. DOI: https://doi.org/10.1007/s12652-020-02865-4.

Alwasel, A., Abdel-Rahman, E. M., Haas, C. T., and Lee, S. (2017) Experience, productivity, and musculoskeletal injury among masonry workers. Journal of Construction Engineering and Management, Vol. 143, No. 6, pp. 05017003. DOI: https://doi.org/10.1061/(ASCE)CO.1943-7862.0001308.

Antwi-Afari, M. F., and Li, H. (2018g) Fall risk assessment of construction workers based on biomechanical gait stability parameters using wearable insole pressure system. Advanced Engineering Informatics, Vol. 38, pp. 683-694. DOI: https://doi.org/10.1016/j.aei.2018.10.002.

Antwi-Afari, M. F., Li, H., Edwards, D. J., Pärn, E. A., Owusu-Manu, D., Seo, J., and Wong, A. Y. L. (2018a) Identification of potential biomechanical risk factors for low back disorders during repetitive rebar lifting. Construction Innovation, Vol. 18, No. 2. DOI: https://doi.org/10.1108/CI-05-2017-0048.

Antwi-Afari, M. F., Li, H., Seo, J., and Wong, A. Y. L. (2018e) Automated detection and classification of construction workers' loss of balance events using wearable insole pressure sensors. Automation in Construction, Vol. 96, pp. 189-199. DOI: https://doi.org/10.1016/j.autcon.2018.09.010.

Antwi-Afari, M. F., Li, H., Umer, W., Yu, Y., and Xing, X. (2020a) Construction activity recognition and ergonomic risk assessment using a wearable insole pressure system. Journal of Construction Engineering and Management, Vol. 146, No. 7, pp. 04020077. DOI: https://doi.org/10.1061/(ASCE)CO.1943-7862.0001849.

Antwi-Afari, M. F., Li, H., Wong, J. K W., Oladinrin, O., Ge, J. X., Seo, J., and Wong, A. Y. L. (2019a) Sensing and warning based technology applications to improve occupational health and safety in the construction industry: A Literature Review. Engineering, Construction and Architectural Management, Vol. 26, No. 8, pp. 1534-1552. DOI: https://doi.org/10.1108/ECAM-05-2018-0188.

Antwi-Afari, M. F., Li, H., Yu, Y., and Kong, L. (2018f) Wearable insole pressure system for automated detection and classification of awkward working postures in construction workers. Automation in Construction, Vol. 96, pp. 433-441. DOI: https://doi.org/10.1016/j.autcon.2018.10.004.

Anwer, S., Li, H., Antwi-Afari, M. F., and Wong, A. L. Y. (2021) Associations between physical or psychosocial risk factors and work-related musculoskeletal disorders in construction workers based on literature in the last 20 years: A systematic review. International Journal of Industrial Ergonomics, Vol. 83, pp. 103113. DOI: https://doi.org/10.1016/j.ergon.2021.103113.

Anwer, S., Li, H., Antwi-Afari, M. F., Umer, W., Mehmood, I., Al-Hussein, M., and Wong, A. Y. L. (2021) Test-retest reliability, validity, and responsiveness of a textile-based wearable sensor for real-time assessment of physical fatigue in construction bar benders. Journal of Building Engineering, Vol. 44, pp. 103348. DOI: https://doi.org/10.1016/j.jobe.2021.103348.

Attal, F., Mohammed, S., Dedabrishvili, M., Chamroukhi, F., Oukhellou, L., and Amirat, Y. (2015) Physical human activity recognition using wearable sensors. Sensors, Vol. 15, No. 12, pp. 31314-31338. DOI: https://doi.org/10.3390/s151229858.

Bao, L., and Intille, S. S. (2004) Activity recognition from user-annotated acceleration data. In International Conference on Pervasive Computing, pp. 1-17, Springer, Berlin, Heidelberg. DOI: https://doi.org/10.1007/978-3-540-24646-6_1.

Buchholz, B., Paquet, V., Wellman, H. and Forde, M. (2003) Quantification of ergonomic hazards for ironworkers performing concrete reinforcement tasks during heavy highway construction. American Industrial Hygiene Association Journal, Vol. 64, No. 2, pp. 243-250. DOI: http://dx.doi.org/10.1080/15428110308984814.

Caldas, C. H., Torrent, D. G., and Haas, C. T. (2006) Using global positioning system to improve materials-locating processes on industrial projects. Journal of Construction Engineering and Management, Vol. 132, No. 7, pp. 741-749. DOI: https://doi.org/10.1061/(ASCE)0733-9364(2006)132:7(741).

Center for Construction Research and Training (CPWR) (2018) The Construction Chart Book: The United States Construction Industry and Its Workers, sixth edition, Silver Spring, MD 20910. Available at: https://www.cpwr.com/wp-content/uploads/publications/The_6th_Edition_Construction_eChart_Book.pdf (Accessed: August 2021).

Chen, J., Qiu, J., and Ahn, C. (2017) Construction worker's awkward posture recognition through supervised motion tensor decomposition. Automation in Construction, Vol. 77, pp. 67-81. DOI: https://doi.org/10.1016/j.autcon.2017.01.020.

Chen, Y., and Shen, C. (2017) Performance analysis of smartphone-sensor behavior for human activity recognition. IEEE Access, Vol. 5, pp. 3095-3110. DOI: https://doi.org/10.1109/ACCESS.2017.2676168.

Dang, L. M., Min, K., Wang, H., Piran, M. J., Lee, C. H., and Moon, H. (2020) Sensor-based and vision-based human activity recognition: A comprehensive survey. Pattern Recognition, Vol. 108, pp. 107561. DOI: https://doi.org/10.1016/j.patcog.2020.107561.

David, G. C. (2005) Ergonomic methods for assessing exposure to risk factors for work-related musculoskeletal disorders. Occupational Medicine, Vol. 55, No. 3, pp. 190–199. DOI: https://doi.org/10.1093/occmed/kqi082.

De Dominicis, C. M., Depari, A., Flammini, A., Rinaldi, S., and Sisinni, E. (2013) Smartphone based localization solution for construction site management. In 2013 IEEE Sensors Applications Symposium Proceedings, pp. 43-48. DOI: https://doi.org/10.1109/SAS.2013.6493554.

Delrobaei, M., Memar, S., Pieterman, M., Stratton, T. W., McIsaac, K., and Jog, M. (2018) Towards remote monitoring of Parkinson's disease tremor using wearable motion capture systems. Journal of the Neurological Sciences, Vol. 384, pp. 38-45. DOI: https://doi.org/10.1016/j.jns.2017.11.004.

Fang, Q., Li, H., Luo, X., Ding, L., Luo, H., Rose, T. M., and An, W. (2018) Detecting non-hardhat-use by a deep learning method from far-field surveillance videos. Automation in Construction, Vol. 85, pp. 1-9. DOI: https://doi.org/10.1016/j.autcon.2017.09.018.

Fang, W., Ding, L., Luo, H., and Love, P. E. (2018) Falls from heights: A computer vision-based approach for safety harness detection. Automation in Construction, Vol. 91, pp. 53-61. DOI: https://doi.org/10.1016/j.autcon.2018.02.018.

Gers, F. A., Schraudolph, N. N., and Schmidhuber, J. (2002) Learning precise timing with LSTM recurrent networks. Journal of Machine Learning Research, Vol. 3, No. 1, pp. 115-143. Available via; https://search.ebscohost.com/login.aspx?direct=true&db=bth&AN=9793888&site=eds-live (Accessed: October 2021).

Gibb, A., Drake, C. and Jones, W. (2018) Costs of occupational ill-health in construction. London: Institution of Civil Engineers. Available via: https://www.ice.org.uk/ICEDevelopmentWebPortal/media/Documents/Disciplines%20and%20Resources/Briefing%20Sheet/Costs-of-occupational-ill-health-in-constructionformattedFINAL.pdf (Accessed: August 2021).

Goodrum, P. M., McLaren, M. A., and Durfee, A. (2006) The application of active radio frequency identification technology for tool tracking on construction job sites. Automation in Construction, Vol. 15, No. 3, pp. 292-302. DOI: https://doi.org/10.1016/j.autcon.2005.06.004.

Guo, H., Yu, Y., and Skitmore, M. (2017) Visualization technology-based construction safety management: a review. Automation in Construction, Vol. 73, pp. 135–144. DOI: http://dx.doi.org/10.1016/j.autcon.2016.10.004.

Han, S., and Lee, S. (2013) A vision-based motion capture and recognition framework for behavior-based safety management. Automation in Construction. Vol. 35, pp. 131–141. DOI: http://dx.doi.org/10.1016/j.autcon.2013.05.001.

Health and Safety Executive (HSE) (2020) Construction Statistics in Great Britain, 2020. Available via: https://www.hse.gov.uk/statistics/industry/construction.pdf. (Accessed: August 2021).

Hignett, S., and McAtamney, L. (2000) Rapid entire body assessment (REBA). Applied Ergonomics, Vol. 31, No. 2, pp. 201–205. DOI: http://dx.doi.org/10.1016/S0003-6870(99)00039-3.

Hochreiter, S., and Schmidhuber, J. (1997) Long short-term memory. Neural Computation, Vol. 9, No. 8, pp. 1735-1780. DOI: https://doi.org/10.1162/neco.1997.9.8.1735.

Ijjina, E. P., and Chalavadi, K. M. (2017) Human action recognition in RGB-D videos using motion sequence information and deep learning. Pattern Recognition, Vol. 72, pp. 504-516. DOI: https://doi.org/10.1016/j.patcog.2017.07.013.

Inoue, M., Inoue, S., and Nishida, T. (2018) Deep recurrent neural network for mobile human activity recognition with high throughput. Artificial Life and Robotics, Vol. 23, No. 2, pp. 173-185. DOI: https://doi.org/10.1007/s10015-017-0422-x.

International Organization for Standardization (ISO) (2006) Ergonomics evaluation of static working postures, ISO 11226: 2000, Geneva. Available via: https://www.evs.ee/products/iso-11226-2000 (Accessed: August 2021).

Joshua, L., and Varghese, K. (2010) Accelerometer-based activity recognition in construction. Journal of Computing in Civil Engineering, Vol. 25, No. 5, pp. 370-379. DOI: https://doi.org/10.1061/(ASCE)CP.1943-5487.0000097.

Karwowski, W. (2001) International encyclopedia of ergonomics and human factors, 2nd Edition, Vol. 3, CRC Press, LLC. ISBN: 9780415304306.

Kim, K., and Cho, Y. K. (2020) Effective inertial sensor quantity and locations on a body for deep learning-based worker's motion recognition. Automation in Construction, Vol. 113, pp. 103126. DOI: https://doi.org/10.1016/j.autcon.2020.103126.

Kingma, D. P., and Ba, J. (2014) Adam: A method for stochastic optimization. *arXiv preprint arXiv:1412.6980*. Available via: http://arxiv.org/abs/1412.6980 (Accessed: October 2021).

Kivi, P., and Mattila, M. (1991) Analysis and improvement of work postures in the building industry: application of the computerised OWAS method. Applied Ergonomics, Vol. 22, No. 1, pp. 43–48. DOI: https://doi.org/10.1016/0003-6870(91)90009-7.

Lee, H., Yang, K., Kim, N., and Ahn, C. R. (2020) Detecting excessive load-carrying tasks using a deep learning network with a Gramian Angular Field. Automation in Construction, Vol. 120, pp. 103390. DOI: https://doi.org/10.1016/j.autcon.2020.103390.

Lee, J., Joo, H., Lee, J., and Chee, Y. (2020) Automatic classification of squat posture using inertial sensors: Deep learning approach. Sensors, Vol. 20, No. 2, pp. 361. DOI: https://doi.org/10.3390/s20020361.

Li, H., Shrestha, A., Heidari, H., Le Kernec, J., and Fioranelli, F. (2019). Bi-LSTM network for multimodal continuous human activity recognition and fall detection. IEEE Sensors Journal, Vol. 20, No. 3, pp. 1191-1201. DOI: https://doi.org/10.1109/JSEN.2019.2946095.

Mantyjarvi, J., Himberg, J., and Seppanen, T. (2001) Recognizing human motion with multiple acceleration sensors. In 2001 IEEE International Conference on Systems, Man and Cybernetics. E-systems and E-man for Cybernetics in Cyberspace (cat. no. 01ch37236), Vol. 2, pp. 747-752. DOI: https://doi.org/10.1109/ICSMC.2001.973004.

Mcatamney, L., and Corlett, N. E. (1993) RULA: A survey method for the investigation of work-related upper limb disorders. Applied Ergonomics, Vol. 24, No. 2, pp. 91–99. DOI: http://dx.doi. org/10.1016/0003-6870 (93)90080-S.

Mekruksavanich, S., and Jitpattanakul, A. (2021) LSTM networks using smartphone data for sensor-based human activity recognition in smart homes. Sensors, Vol. 21, No. 5, pp. 1636. DOI: https://doi.org/10.3390/s21051636.

Nath, N. D., Chaspari, T., and Behzadan, A. H. (2018) Automated ergonomic risk monitoring using body-mounted sensors and machine learning. Advanced Engineering Informatics, Vol. 38, pp. 514-526. DOI: https://doi.org/10.1016/j.aei.2018.08.020.

Nguyen, T. N., Lee, S., Nguyen-Xuan, H., and Lee, J. (2019) A novel analysis-prediction approach for geometrically nonlinear problems using group method of data handling. Computer Methods in Applied Mechanics and Engineering, Vol. 354, pp. 506-526. DOI: https://doi.org/10.1016/j.cma.2019.05.052.

Ordóñez, F. J., and Roggen, D. (2016) Deep convolutional and LSTM recurrent neural networks for multimodal wearable activity recognition. Sensors, Vol. 16, No. 1, pp. 115. DOI: https://doi.org/10.3390/s16010115.

Portugal, I., Alencar, P., and Cowan, D. (2018) The use of machine learning algorithms in recommender systems: A systematic review. Expert Systems with Applications, Vol. 97, pp. 205-227. DOI: https://doi.org/10.1016/j.eswa.2017.12.020.

Preece, S. J., Goulermas, J. Y., Kenney, L. P., Howard, D., Meijer, K., and Crompton, R. (2009) Activity identification using body-mounted sensors—a review of classification techniques. Physiological Measurement, Vol. 30, No. 4, R1–R33. DOI: https://doi.org/10.1088/0967-3334/30/4/R01.

Rashid, K. M., and Louis, J. (2019) Times-series data augmentation and deep learning for construction equipment activity recognition. Advanced Engineering Informatics, Vol. 42, pp. 100944. DOI: https://doi.org/10.1016/j.aei.2019.100944.

Ray, S. J., and Teizer, J. (2012) Real-time construction worker posture analysis for ergonomics training. Advanced Engineering Informatics, Vol. 26, No. 2, pp. 439–455. DOI: http://dx.doi.org/10.1016/j.aei.2012.02.011.

Ryu, J., Seo, J., Jebelli, H., and Lee, S. (2019) Automated action recognition using an accelerometer-embedded wristband-type activity tracker. Journal of Construction Engineering and Management, Vol. 145, No. 1, pp. 04018114. DOI: https://doi.org/10.1061/(ASCE)CO.1943-7862.0001579.

Safe Work Australia. (2020) Key work health and safety statistics Australia 2020: Work-related injury fatalities. Available at: https://www.safeworkaustralia.gov.au/sites/default/files/2020-11/Key%20Work%20Health%20and%20Safety%20Stats%202020.pdf. (Accessed: August 2021).

Seo, J., and Lee, S. (2021) Automated postural ergonomic risk assessment using vision-based posture classification. Automation in Construction, Vol. 128, pp. 103725. DOI: https://doi.org/10.1016/j.autcon.2021.103725.

Seo, J., Starbuck, R., Han, S., Lee, S., and Armstrong, T. J. (2015) Motion data-driven biomechanical analysis during construction tasks on sites. Journal of Computing in Civil Engineering, Vol. 29, No. 4, pp. B4014005. DOI: https://doi.org/10.1061/(ASCE)CP.1943-5487.0000400.

Seyfioğlu, M. S., Özbayoğlu, A. M., and Gürbüz, S. Z. (2018) Deep convolutional autoencoder for radar-based classification of similar aided and unaided human activities. IEEE Transactions on Aerospace and Electronic Systems, Vol. 54, No. 4, pp. 1709-1723. DOI: https://doi.org/10.1109/TAES.2018.2799758.

Son, H., Choi, H., Seong, H., and Kim, C. (2019) Detection of construction workers under varying poses and changing background in image sequences via very deep residual networks. Automation in Construction, Vol. 99, pp. 27-38. DOI: https://doi.org/10.1016/j.autcon.2018.11.033.

Srivastava, N., Hinton, G., Krizhevsky, A., Sutskever, I., and Salakhutdinov, R. (2014) Dropout: a simple way to prevent neural networks from overfitting. The Journal of Machine

Learning Research, Vol. 15, No. 1, pp. 1929-1958. Available via: http://jmlr.org/papers/v15/srivastava14a.html (Accessed: October 2021).

Teizer, J., Caldas, C. H., and Haas, C. T. (2007) Real-time three-dimensional occupancy grid modeling for the detection and tracking of construction resources. Journal of Construction Engineering and Management, Vol. 133, No. 11, pp. 880-888. DOI: https://doi.org/10.1061/(ASCE)0733-9364(2007)133:11(880).

Umer, W., Antwi-Afari, M. F., Li, H., Szeto, G. P., and Wong, A. Y. L. (2017a) The prevalence of musculoskeletal symptoms in the construction industry: A systematic review and meta-analysis. International Archives of Occupational and Environmental Health, Vol. 91, No. 2, pp. 125-144. DOI: https://doi.org/10.1007/s00420-017-1273-4.

Umer, W., Li, H., Szeto, G. P. Y., and Wong, A. Y. L. (2017b) Identification of biomechanical risk factors for the development of lower-back disorders during manual rebar tying. Journal of Construction Engineering and Management, Vol. 143, No. 1, pp. 04016080. DOI: https://doi.org/10.1061/(ASCE)CO.1943-7862.0001208.

Umer, W., Li, H., Yu, Y., Antwi-Afari, M. F., Anwer, S., and Luo, X. (2020) Physical exertion modeling for construction tasks using combined cardiorespiratory and thermoregulatory measures. Automation in Construction, Vol. 112, pp. 103079. DOI: https://doi.org/10.1016/j.autcon.2020.103079.

Valero, E., Sivanathan, A., Bosché, F., and Abdel-Wahab, M. (2017) Analysis of construction trade worker body motions using a wearable and wireless motion sensor network. Automation in Construction, Vol. 83, pp. 48-55. DOI: https://doi.org/10.1016/j.autcon.2017.08.001.

Wang, D., Dai, F., and Ning, X. (2015a) Risk assessment of work-related musculoskeletal disorders in construction: state-of-the-art review. Journal of Construction Engineering and Management, Vol. 141, No. 6, pp. 1–15. DOI: http://dx.doi.org/10.1061/(ASCE)CO.1943-7862.0000979.

Wang, J., Chen, D., Zhu, M., and Sun, Y. (2021). Risk assessment for musculoskeletal disorders based on the characteristics of work posture. Automation in Construction, Vol. 131, pp. 103921. DOI: https://doi.org/10.1016/j.autcon.2021.103921.

Xing, X., Zhong, B., Luo, H., Rose, T., Li, J., and Antwi-Afari, M. F. (2020) Effects of physical fatigue on the induction of mental fatigue of construction workers: A pilot study based on a neurophysiological approach. Automation in Construction, Vol. 120, pp. 103381. DOI: https://doi.org/10.1016/j.autcon.2020.103381.

Yan, X., Li, H., Li, A. R., and Zhang, H. (2017) Wearable IMU-based real-time motion warning system for construction workers' musculoskeletal disorders prevention. Automation in Construction, Vol. 74, pp. 2-11. DOI: https://doi.org/10.1016/j.autcon.2016.11.007.

Yang, K., Ahn, C. R., and Kim, H. (2020) Deep learning-based classification of work-related physical load levels in construction. Advanced Engineering Informatics, Vol. 45, pp. 101104. DOI: https://doi.org/10.1016/j.aei.2020.101104.

Yang, S., Yu, X., and Zhou, Y. (2020) LSTM and GRU neural network performance comparison study: Taking Yelp review dataset as an example. In 2020 International Workshop on Electronic Communication and Artificial Intelligence (IWECAI), pp. 98-101. DOI: https://doi.org/10.1109/IWECAI50956.2020.00027.

Yang, X., Li, H., Yu, Y., Luo, X., Huang, T., and Yang, X. (2018) Automatic pixel-level crack detection and measurement using fully convolutional network. Computer-Aided Civil and

Infrastructure Engineering, Vol. 33, No. 12, pp. 1090-1109. DOI: https://doi.org/10.1111/mice.12412.

Yilmaz, A., Javed, O., and Shah, M. (2006) Object tracking: A survey. ACM Computing Surveys (CSUR), Vol. 38, No. 4, pp. 13-es. DOI: https://doi.org/10.1145/1177352.1177355.

Yu, Y., Umer, W., Yang, X., and Antwi-Afari, M. F. (2021) Posture-related data collection methods for construction workers: A review. Automation in Construction, Vol. 124, pp. 103538. DOI: https://doi.org/10.1016/j.autcon.2020.103538.

Yu, Y., Yang, X., Li, H., Luo, X., Guo, H., and Fang, Q. (2019) Joint-level vision-based ergonomic assessment tool for construction workers. Journal of Construction Engineering and Management, Vol. 145, No. 5, pp. 04019025. DOI: https://doi.org/10.1061/(ASCE)CO.1943-7862.0001647.

Zarzycki, K., and Ławryńczuk, M. (2021) LSTM and GRU neural networks as models of dynamical processes used in predictive control: A comparison of models developed for two chemical reactors. Sensors, Vol. 21, No. 16, pp. 5625. DOI: https://doi.org/10.3390/s21165625.

Zhang, H., Yan, X., and Li, H. (2018) Ergonomic posture recognition using 3D view-invariant features from single ordinary camera. Automation in Construction, Vol. 94, pp. 1-10. DOI: https://doi.org/10.1016/j.autcon.2018.05.033.

Zhao, J., and Obonyo, E. (2020) Convolutional long short-term memory model for recognizing construction workers' postures from wearable inertial measurement units. Advanced Engineering Informatics, Vol. 46, pp. 101177. DOI: https://doi.org/10.1016/j.aei.2020.101177.

Zhao, J., and Obonyo, E. (2021) Applying incremental Deep Neural Networks-based posture recognition model for ergonomics risk assessment in construction. Advanced Engineering Informatics, Vol. 50, pp. 101374. DOI: https://doi.org/10.1016/j.aei.2021.101374.

Zhong, B., Li, H., Luo, H., Zhou, J., Fang, W., and Xing, X. (2020) Ontology-based semantic modeling of knowledge in construction: classification and identification of hazards implied in images. Journal of Construction Engineering and Management, Vol. 146, No. 4, pp. 04020013. DOI: https://doi.org/10.1061/(ASCE)CO.1943-7862.0001767.

Zhong, B., Xing, X., Luo, H., Zhou, Q., Li, H., Rose, T., and Fang, W. (2020) Deep learning-based extraction of construction procedural constraints from construction regulations. Advanced Engineering Informatics, Vol. 43, pp. 101003. DOI: https://doi.org/10.1016/j.aei.2019.101003.