The Process Semantics of Time and Space as Anticipation

Michael Heather

Nick Rossiter

nick.rossiter@unn.ac.uk

University of Northumbria

http://computing.unn.ac.uk/staff/CGNR1/

Outline

- Relationships in Category Theory
  - Pivotal Role of Adjointness
  - Intension-Extension
  - Static/Dynamic
  - All a Question of Typing
- Natural Composition of Systems
  - Godement
  - Satisfy Complex Requirements
- Time-Space and other Examples
  - Relevance to Anticipation

Purpose

- To attempt to show that the natural relationships declared categorically can satisfy those needed in the real world and provide a basis for anticipation

Relationships Dominate Category Theory

- Categories
  - Cartesian closed – products
  - Locally cartesian closed – pullbacks/comma/slice
  - Intra-category
- Functors
  - Map from one category to another
  - Inter-category
- Natural Transformations
  - Map from one functor to another
  - Inter-functor

Adjointness

- Perhaps most important relationship is that of adjointness
- Discovered by Kan
- Elaborated by Lawvere
- Provides a more general type of relationship then equivalence
  - Suited to real-world where relationships are not always so simple

Inter-relationship between two Categories L, R through Functors F,G

If adjointness holds, we write $F \dashv G$

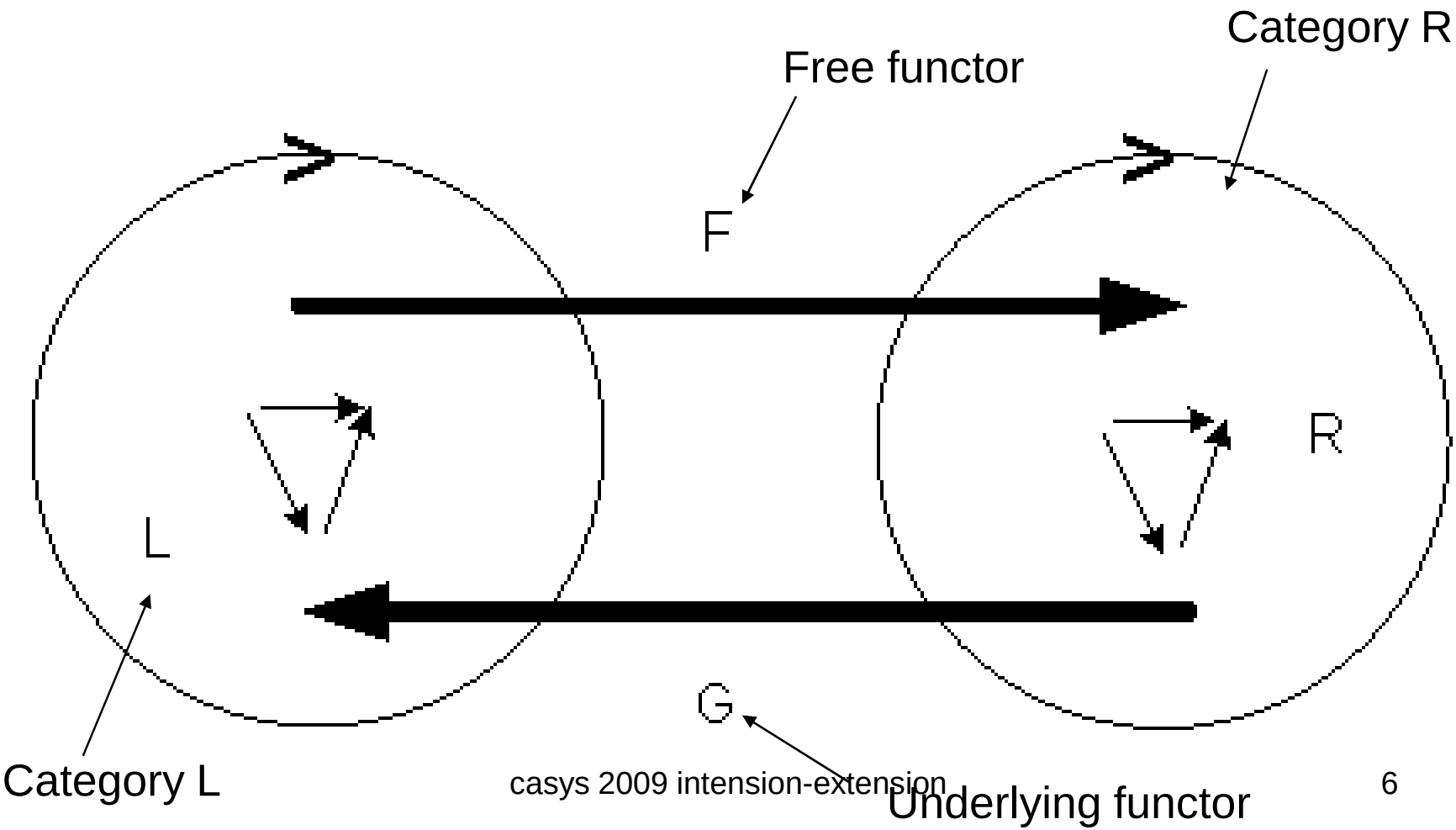

Features of Adjointness $F \dashv G$

- Free functor (F) provides openness
- Underlying functor (G) enforces rules
- Natural so one (unique) solution
- Special case
  - GF(L) is the same as L AND
  - FG(R) is the same as R
  - Equivalence relation
- Adjointness in general is a relationship less strict than equivalence
  - $1_L <= GF$ if and only if $FG <= 1_R$

Example of Adjointness

$$\begin{tikzcd} L \arrow[r, shift left, "F"] & \mathbf{R} \arrow[l, shift left, "G"] \end{tikzcd}$$

- If conditions hold, then we can write the adjunction $F \dashv G$
- The adjunction is represented by a 4-tuple:
  - $\langle F, G, \eta, \varepsilon \rangle$
- η and ε are unit and counit respectively
  - $\eta : L \rightarrow GFL$; $\varepsilon : FGR \rightarrow R$
  - Measure displacement in mapping on one cycle

Uses of Adjointness

- Representing intension-extension
- Intension-extension is critical for representing information systems
  - Goes back to Port Royal Logic
- Intension is definition of a system
  - The permanent part that does not change
- Extension is time-varying part of a system
  - The time-varying part that is in constant flux

Example 1

- Banking System
- Intension is definition of structures, rules and procedures that specify how the bank operates; can be a preorder with cycles
- Extension is the data values for the banking operation at a particular time; a partial order

Consider one relationship

- Customer (C) : account (A) in context of holds (H)
- For Intension (I) - Extension (E) define 2 categories and 3 functors:

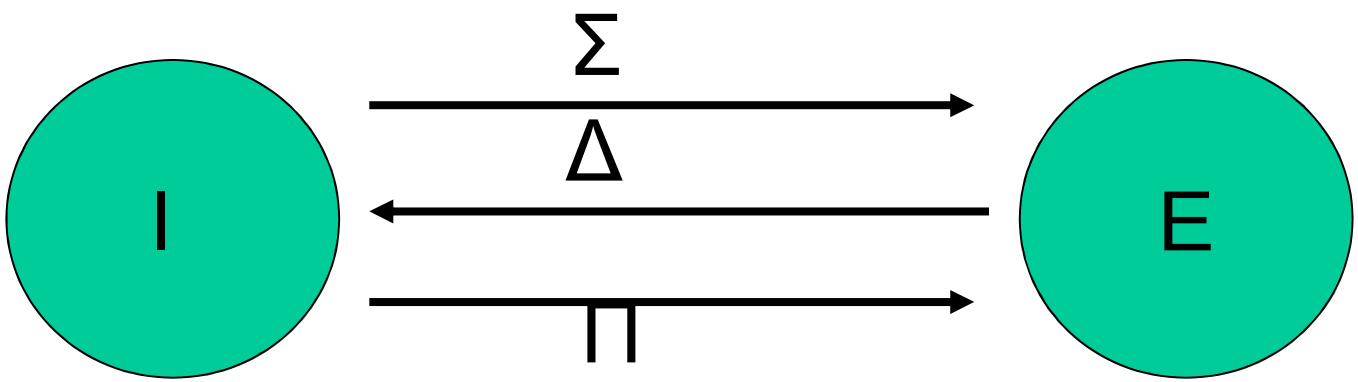

$C \times_H A$

 $C + A$

Definitions

- C X_H A is the relationship C X A in the context of H
- C is customer, A is account, H is holds
- C + A is all possible values for pairs of C,A; by convention written this way but also includes other pools of possible data values (data soup, data types)

Functors pair 1

- Σ selects values that exist for C, A in E
  - Free functor as performing choice
- Δ takes values that exist for relationship between C, A in E and checks conformity with definition in I for C X_H A
  - Underlying functor as checking a rule
- If Σ and Δ are adjoint, we write:

$$\Sigma \dashv \Delta$$

Functors pair 2

- Δ takes values that exist for relationship between C, A in E and checks conformity with definition in I for C X_H A
  - Because many contexts may exist it is now a free functor as selecting a role (viewpoint is now free)
  - Could have other contexts H', H'' …
  - Note no use of number (Gödel !)
- Π selects values that exist for CX_H A in E
  - Underlying functor as checking that values selected in E match the type definition
- If both pairs of adjoints hold, we write:

$$\Sigma \dashv \Delta \dashv \Pi$$

Simultaneity

- In all categorical constructions
  - There is no sequence in the composition
  - The whole structure is evaluated simultaneously (snapped)
- The I-E relationship is an arrow

$$\Sigma \dashv \Delta \dashv \Pi$$

and not any of the categories or functors on their own

Can Build up Relations

- Composition of arrows is natural
  - Godement calculus
- As I-E relation is an arrow
- Can compose one I-E relation with another
- Can build up complex levels of types and definitions with flexible meta levels

black - objects

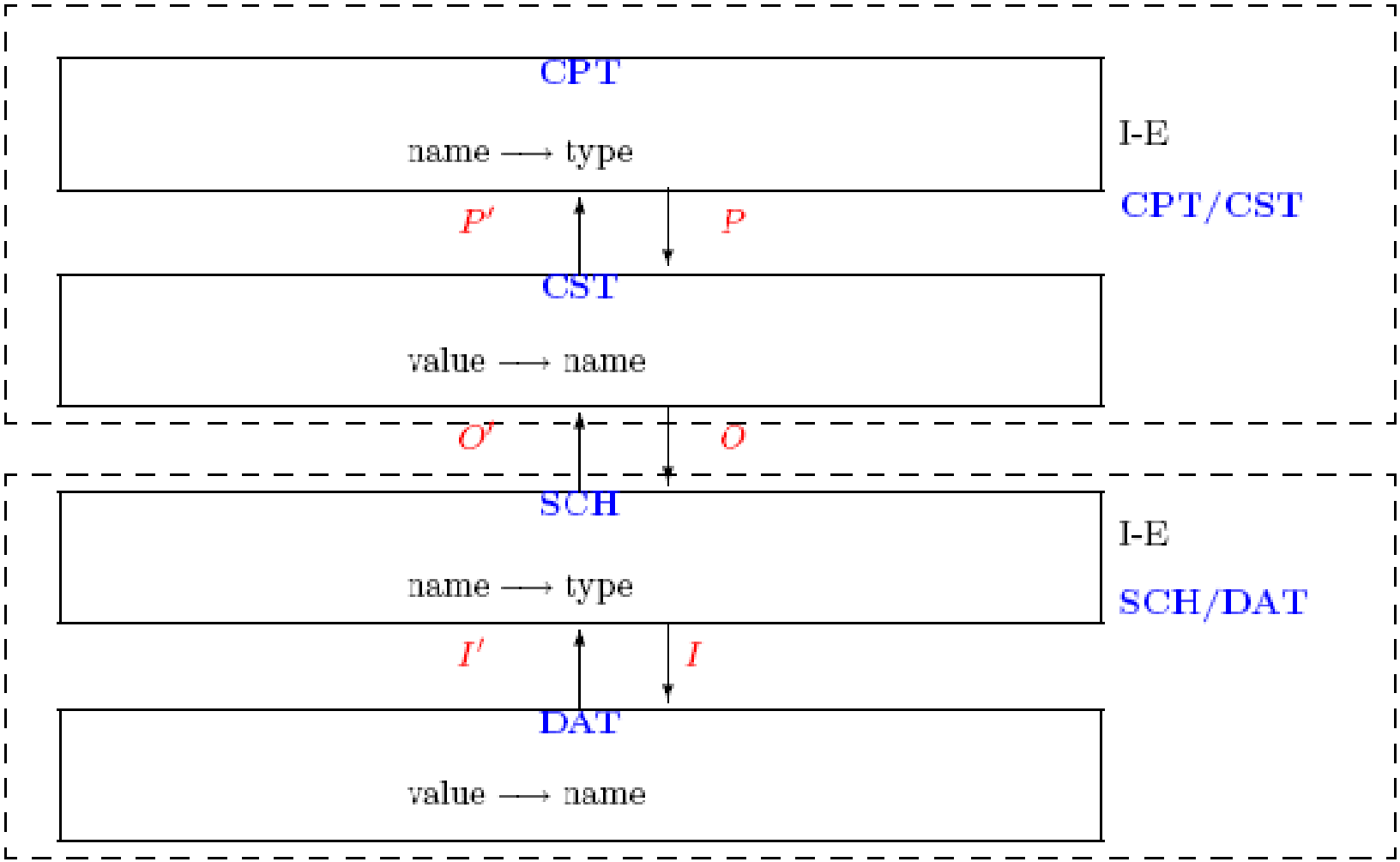

Defining Four Levels of Data Typing with Contravariant Functors and Intension-Extension (I-E) Pairs

Composition of I-E pairs

- Higher I-E pair becomes $(\Sigma \dashv \Delta \dashv \Pi)'$
- Lower I-E pair becomes $(\Sigma \dashv \Delta \dashv \Pi)$
- Then top-down is

$$(\Sigma \dashv \Delta \dashv \Pi) \circ (\Sigma \dashv \Delta \dashv \Pi)'$$

and bottom-up is

$$(\Sigma \dashv \Delta \dashv \Pi)' \circ (\Sigma \dashv \Delta \dashv \Pi)$$

Form of Underlying Categories

- Might represent data structure (static)
  - Pullbacks/ pushouts
  - Comma/ slice categories
- Might represent process (dynamic)
  - Monads/comonads

Pullback

$$
\begin{tikzcd}
 & C \arrow[dr, "I_c"] & \\
C \times_H A \arrow[ur, "\pi_c"] \arrow[rr, shift left, "\Sigma"] \arrow[dr, "\pi_a"'] & & C + A \arrow[ll, shift left, "\Delta"] \arrow[ll, shift right, "\Pi"'] \\
 & A \arrow[ur, "I_a"'] &
\end{tikzcd}
$$

Pullback versus I-E

- Saying much the same thing
- Pullback useful as a descriptive diagram
- I-E is more useful algebraically as it:
  - Spells out the exact nature of the relationship
  - Is an arrow which can be composed with other categorical arrows

Monad

$$\begin{tikzcd}
T^3 \arrow[r, "T\mu"] \arrow[d, "\mu T"'] & T^2 \arrow[d, "\mu"] \\
T^2 \arrow[r, "\mu"'] & T
\end{tikzcd}$$

Transaction (ACID):
T is one cycle
T^2 is two cycles
T^3 is three cycles

T is an endofunctor, can be an adjoint: GF or $\Sigma \dashv \Delta \dashv \Pi$, latter as 2 pairs strictly

Monad

- Monad is an abstract concept:

$$\text{Monad} = \langle T, \eta, \mu \rangle$$

Where T is the endofunctor -- endofunctor is functor with same source and target (often an adjoint)

η is the unit of adjunction: change in L on one cycle

μ is the multiplication: change between T^2 and T (on 2nd cycle looking back)

But can express in more detail:

Adjointness between Monad/Comonad

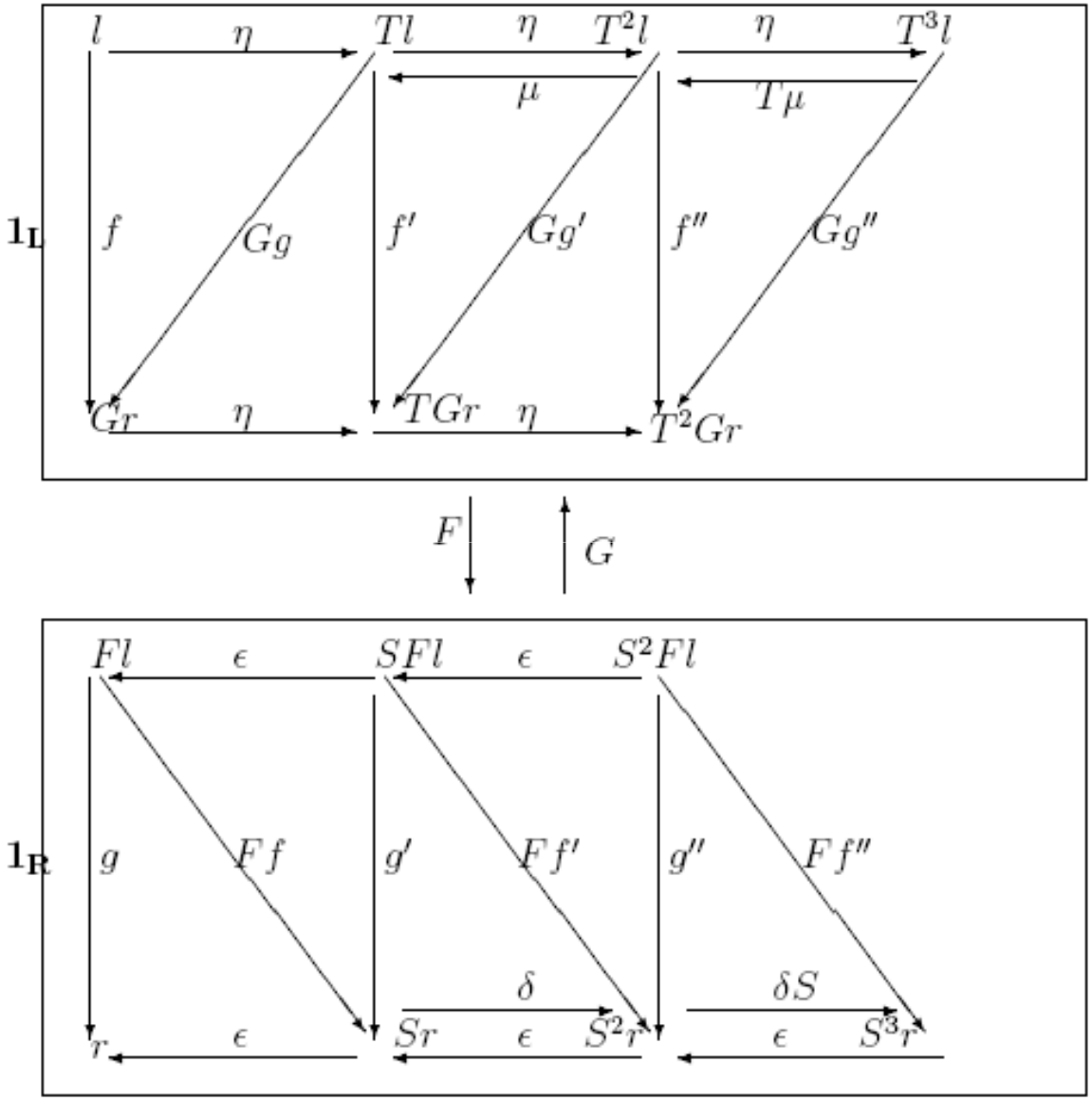

Monad $=< T, \eta, \mu >$

T = GF

Comonad $=< S, \epsilon, \delta >$

S = FG

Comonad

- Comonad is dual of Monad
- Comonad = <S, ε, δ>
- Where S is the endofunctor (often an adjoint)
- ε is the counit of adjunction, measuring change in R on one cycle
- δ is the comultiplication, measuring change between S and S^2 (looking forward)

Simultaneity

- Monad/comonad are not handled in a sequential fashion
- Cycles are simultaneous
- Structure satisfying the rules is snapped

Time/Space

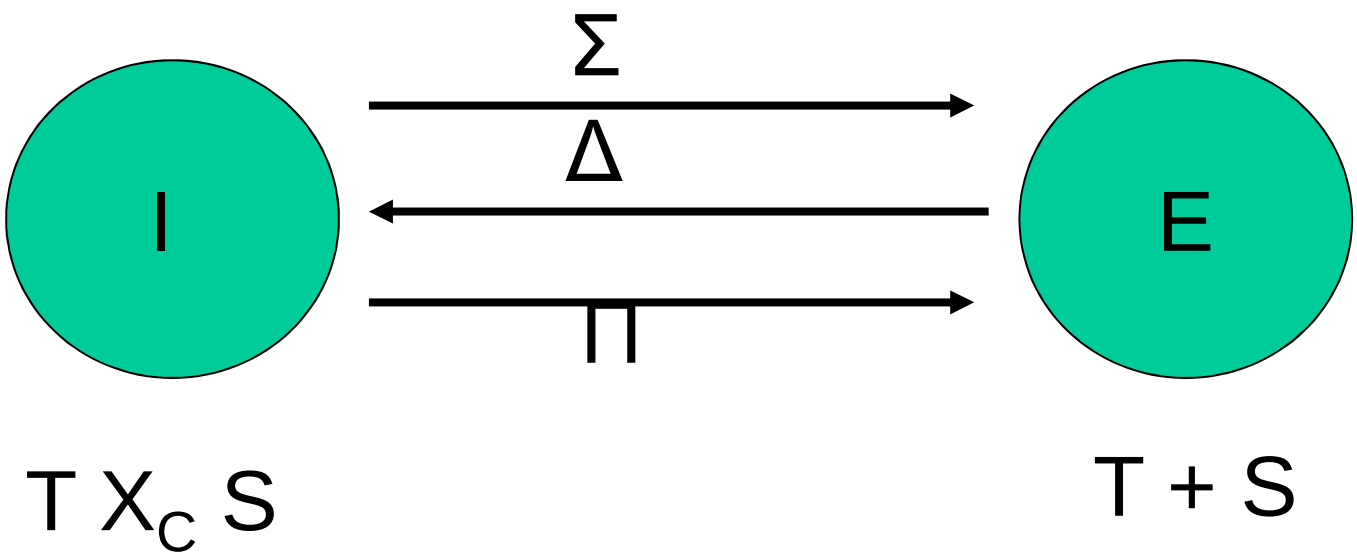

Time/Space as I-E

- T & S is in the intension
- T || S is in the extension

- $\Sigma \dashv \Delta \dashv \Pi$ gives the relationship for a particular context C between:

T & S and T || S

where T & S is the invariant intension (I) and T || S is the time-varying extension (E)

Relativistic: η, ε are significant; classical: maybe not so.

Anticipation 1

- So is anticipation the comultiplication
  - $\delta: S \rightarrow S^2$
  - taking the comonad forward one cycle
- This is a tempting conclusion
- But it is not so simple
- Anticipation is not one arrow on its own
- Need to consider the full context

Anticipation 2

- Could better be viewed as looking forward:

$$\delta: S \rightarrow S^2 \ (FG \rightarrow FGFG)$$

in the context of the monad/comonad adjointness, in particular of the arrow looking back:

$$\mu : T^2 \rightarrow T \ (GFGF \rightarrow GF)$$